THE

WIRELESS ENGINEER

AND

EXPERIMENTAL WIRELESS

VOL. XII. SEPTEMBER, 1935 No. 144

Editorial

A Common Defect in Cone Loudspeakers

EVERYONE will have noticed that the reproduction of a very loud sustained note is often accompanied by a disagreeable flutter. This is generally most noticeable when an operatic soprano sings a fortissimo high note and in bad cases suggests that she is persevering in spite of someone holding her throat in an attempt to stop her. It is generally believed that this effect is due to the cone of the loud speaker producing a sub-harmonic of the note, that is, a vibration of half or a quarter of the frequency of the fundamental. When one presses on the end of a strutt or leans too heavily on a light cane walking stick, it bows out to one side, and on quickly removing the pressure it swings back to its normal shape and beyond it, thus bowing out on the other side; if at this moment one again exerts the end pressure it will continue to bow out in this direction and a complete cycle of end pressure will have produced a half cycle of transverse vibration.

If the frequency of the applied end pressure happens to be just twice the natural transverse frequency, a small applied force will build up a large transverse vibration. Now the force exerted on the cone by the moving coil may be resolved into two components, one of which acts at right angles to the surface and the other in the direction of the material of the cone, and if one pictures the cone as made up of a number of radiant strips, the latter component acts on these strips in the same way as the end force on the flexible strutt. In the cone, however, there is a constraint which is not present in the separate strutt, since a simple symmetrical vibration of the type described would necessitate a variation of the circumference of the cone at a point midway between the coil and the outer periphery. This suggests that the phenomenon may be associated with a deformation of the cone such that one part bulges outwards when another part bulges inwards, and the nature of the sound produced certainly suggests a periodic building up of the disturbing oscillation due to mechanical coupling between different modes of vibration of the cone. A recent number of *Hochfrequenztechnik** contained an inter-

* "Untersuchungen an Konuslautsprechern," by G. Schaffstein, p. 204, June, 1935.

www.americanradiohistory.com

esting account of experiments made by a method described by Backhaus in 1928 in which a piece of bronze foil about 1 cm. square is stuck on the cone and connected by a very fine wire so as to interfere as little as possible with the natural movements of the cone. A fixed brass plate at a distance of 0.5 to 2 mm. forms the other electrode of the condenser, the capacitance of which varies with the movements of the cone. The phase and wave form of this one point of the cone can thus be determined over the whole frequency range.

Method of Examination

In the paper referred to, two such points on the cone, one near the outer edge and one near the coil, were examined over the range from 50 to 5,000 cycles per second. A high frequency generator was loosely coupled to a tuned circuit, to the condenser of which the small exploring condenser was connected in parallel so that its movements affected the tuning and thus modified the voltage across the condenser. This voltage was applied to the grid of a three-electrode anode-bend rectifier, the output of which was amplified by an audio-frequency amplifier; the output of this gave a measure of the variations of capacity of the exploring condenser, and thus of the amplitude of the movements of the cone. The resulting curves show that the vibration is simple up to about 200 c.p. second but that beyond this frequency the cone is subdivided into a number of sections, giving innumerable resonances with little apparent connection between those at the rim and those near the coil. To make a complete exploration of the whole cone in this way would involve an enormous amount of work.

To determine the phase of the movements relatively to the current operating the loud speaker, the output of the audio-frequency amplifier referred to above was supplied to one strip of an oscillograph, whilst the operating current was supplied to a second strip; the resulting sound acted on a microphone the output from which was applied to the third strip. The recorded movement of the cone refers, of course, to one point only, which point may, in any given case, be playing a very unimportant rôle in the sound production; by adjusting the frequency, however, the oscillographic record will indicate when the point under observation has a large amplitude. For any one point on the cone, one has not only the whole frequency range over which to explore, but—and this is a very important point—the effect at any frequency of increasing the operating current. In the paper referred to records are given for four different points on the cone under identical conditions; in every case there is a pronounced half-frequency oscillation, and in some cases it grows and dies away at a relatively low frequency. In cases where it was absent it could be produced quite strongly by loading the free rim of the cone and thus providing a reaction against the longitudinal movement.

Curves and their Interpretation

Interesting curves are given showing how, if the cone is vibrating normally, either a slight increase in the amplitude or a slight change of frequency may cause a sub-harmonic oscillation to set in and build up to a very large amplitude. It is also shown that having once started they exhibit the phenomenon known as "Ziehen," in that they tend to persist over a certain frequency range in which they did not tend to build up.

Whether or not these sub-harmonics are the sole cause of the defect referred to, they certainly provide an ample explanation. They can be minimised by making the cone as stiff and light as possible especially towards the rim.

G. W. O. H.

www.americanradiohistory.com

A R.F. Measurement of Resistance, Reactance and Impedance*

By T. C. Macnamara

A NUMBER of methods of measuring the characteristics of circuits at radio frequency have been advocated from time to time, including the use of radio-frequency bridges, impedance meters and the like. Whilst these schemes doubtless possess much value, the author has always found it convenient to employ a method of direct measurement which has been found to give such accurate and consistent results that it is thought to merit a full description.

The system to be described, which was originally due to H. L. Kirke of the B.B.C. Research Dept., has been developed by the author during several years' experience with this class of work. Briefly, the method consists in injecting a voltage at the desired frequency into the circuit to be measured, by direct connection, either in series or parallel; measuring the applied voltage and also the resultant current. The value of the impedance or resistance under consideration is then given by the classic expression

$$R = E/I.$$

This sounds a simple process, as it indeed is, the results obtained being extremely accurate, provided that certain precautions are observed, the nature of which will be outlined later in this article. The source of R.F. potential required to carry out the test is a R.F. generator which is so designed that the frequency generated cannot be "pulled" by any adjustment to the output circuit. In addition, great attention is paid to the screening of the unit as a whole in order to prevent the leakage of R.F. fields which might link with the circuits under test, and so cause serious errors in the results obtained.

Radio-frequency Generator

It has been stated that the R.F. generator must be so designed that the frequency generated shall be as free as possible from variations resultant upon adjustments to its output circuits. There are several known methods of producing this result, for instance, a number of neutralised amplifier stages might be used subsequent to the oscillator, or alternatively, a screen-grid stage might be embodied. The author, however, has found it most convenient to employ a single stage of frequency doubling, which acts admirably as a buffer, and effectively prevents the frequency of the oscillator from being "pulled" by any change in subsequent circuital conditions.

The reasons for the buffer action of a frequency doubling stage are several. In the first place, the magnitude of the feed-back from the anode output circuit to the grid input circuit of a pentode frequency doubler is small, by virtue of the screen feature of the valve. The same applies to a stage in which two triodes are employed, connected differentially as to the grids and in parallel as to the anodes, because such a stage is inherently self-neutralising. Secondly, the effect of reaction through spurious capacity couplings is far less apparent, because the anode and grid circuits are not tuned to the same resonant frequency. Finally, frequency doubler stages, whether of the pentode or twin triode type, can be operated with negligible grid current; thus removing almost entirely one of the most prevalent causes of frequency "pulling" in radio-frequency amplifiers, namely, the fluctuations of load referred through variations of grid current under the influence of varying anode potential.

In its final form, therefore, the apparatus consists of a valve oscillator, followed by a frequency doubling stage, and a neutralised triode stage having an input capacity of 40 watts.

The circuits may now be described in detail, with reference to Fig. 1.

Oscillator

A high-μ triode A is caused to oscillate by means of a tuned circuit L_1C_1, employing

* MS. accepted by the Editor, December, 1934.

www.americanradiohistory.com

capacity reaction through the condenser C_2, used in conjunction with the grid-leak R_1. The high-tension supply is fed through a voltage dropping resistance R_2 connected to a tapping on the inductance L_1, the tapping point being located at earth potential from the R.F. point of view by the condenser C_3. The inductance L_1 is not equally split by the tapping, but rather so that the bulk of the R.F. voltage appears between anode and earth. It is necessary to determine the optimum position of the tapping by experiment, but no difficulty will be experienced in finding a position at which strong oscillations are maintained over the whole wavelength range of the circuit.

Frequency Doubler

A portion of the potential across the circuit L_1C_1 is taken off through a stopping condenser C_4, and applied to the control grid of a power pentode B; which is provided with a high-resistance grid-leak R_3. The "screen" grid of the valve is supplied with potential from the main H.T. through the resistance R_4, and decoupled by means of the condenser C_5. In series with the anode of the pentode is a tuned circuit L_2C_6 fed from the H.T. supply through the dropping resistance R_5, with the decoupling condenser C_7, which serves to locate at earth potential the end of the circuit remote from the anode. The circuit L_2C_6 is, of course, tuned to resonate at the second harmonic of the original frequency, and the potential across it is impressed on the grid of the succeeding stage through a stopping condenser C_8. It might be found in practice that better operating conditions were obtained by tapping the grid of the final stage down the inductance L_2, but this is a matter for experiment.

Output Stage

The final stage embodies a small transmitting valve C which will handle an input of 40 watts at 400 volts H.T. The grid is excited from the preceding stage through the stopping condenser C_8, and is biased by the grid-leak R_6. Neutralising is achieved by means of a small condenser C_9 connected back to the grid from the end remote from the anode, of the unequally split anode circuit $L_3L_4C_{10}$. The H.T. supply is fed to a tapping on the coil L_3, which point is located

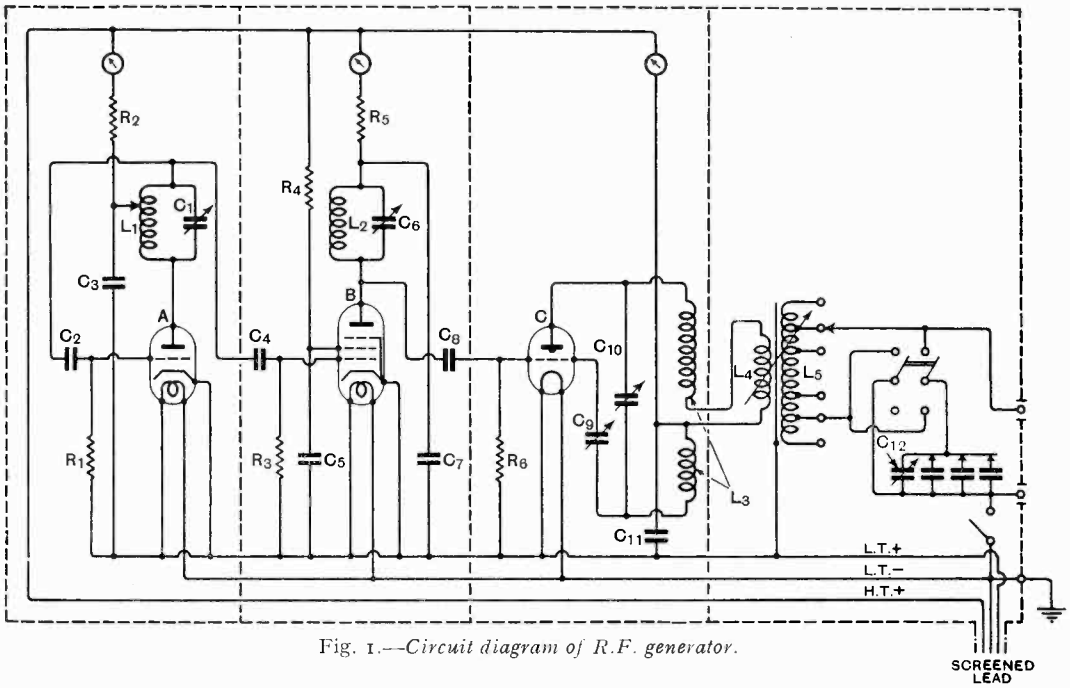

Fig. 1.—*Circuit diagram of R.F. generator.*

www.americanradiohistory.com

at earth potential for high-frequency by the condenser C_{11}. The coupling coil L_4 is connected in series with L_3 at the earthy point, and consists of a winding on a spherical former, which may be rotated to vary the coupling to the succeeding circuit.

Output Coupled Circuit

The nature of the output circuits must be carefully studied, as it is largely upon the satisfactory design of this portion of the apparatus that the accuracy of measurement depends. The author has found it essential that no unwanted potential differences should exist between the output circuit as a whole, and any other point; and in order to avoid this undesirable feature an electrostatic screen is interposed between the coils forming the primary and secondary of the output coupled circuit. This screen takes the form of an interrupted copper cylinder spaced about ½in. from either winding and connected to earth. The extreme importance of this measure must be stressed, and in order that no confusion shall exist, the arrangement of the screen is shown diagrammatically in Fig. 2. The existence of this screen ensures that the coupling to the output circuit is purely magnetic, and no significant potential due to unwanted capacity coupling can appear on the output circuit.

It will be observed that the output circuit consists of a coil L_5 provided with a series of tappings by means of which the value of inductance in circuit may be varied. The coil L_5 is symmetrically disposed about the coupling coil L_4, and the tappings are so arranged that this symmetry is maintained for all values of inductance in L_5. If this condition is satisfied it is always possible to reduce the voltage due to magnetic induction to zero, by rotating the coupling coil to the point where its axis is at right angles to the axis of the secondary. It is extremely useful to be able to do this, as it enables the operator to satisfy himself that no unwanted potential is present.

The tuning condenser C_{12} is composed of an air-dielectric variable condenser used in conjunction with fixed condensers, which may be switched in at will, thus providing a continuously variable range of capacity. A switch is provided so that the tuning condenser may be connected either in series or parallel with the inductance L_5, with respect to the insulated output terminals; and a further switch earths one of these terminals at will. The function of these switches will be explained later.

Power Supplies

The anode supply is drawn from a small motor-generator set contained in a screened box, together with a 12 v. car accumulator from which it is driven, through the medium of a rheostat which serves to regulate the H.T. voltage applied to the apparatus. The L.T. supply is taken from tappings on the same battery.

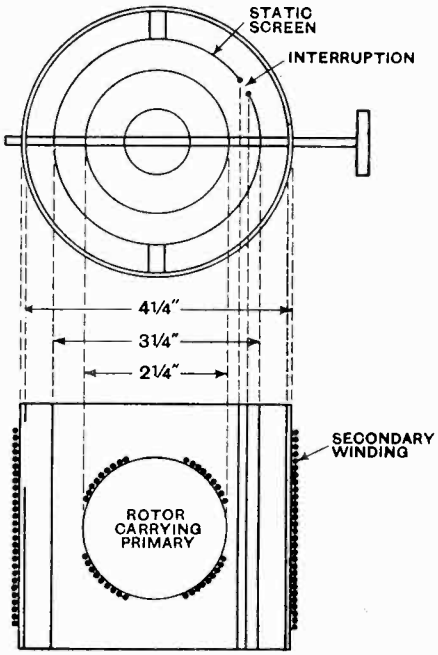

Fig. 2.—*Details of output coupling coil.*

Screening and Earthing

It will readily be appreciated that effective screening is of extreme importance in measuring apparatus of this type, and under ideal conditions there should be no possibility of the escape of high-frequency fields, otherwise there is a danger of direct induction into the circuits under test, with the consequence that the accuracy of measurement

www.americanradiohistory.com

would be seriously impaired. In order to provide adequate screening, the apparatus is enclosed in a case constructed from $\frac{3}{32}$in. aluminium sheet, and the battery and generator are placed in a copper-lined box, all interconnecting leads being run through a length of flexible metal tubing, both ends of which are bonded to the screening. Inter-stage screens are provided within the case, and the output circuit is contained in a separate compartment which is very carefully screened with copper sheet.

The arrangement of earths is also of considerable importance, as the existence of unsuspected potential on earth leads can introduce relatively enormous errors into the results obtained. For this reason the whole apparatus is enclosed in screening boxes, including the battery and generator, so that the effect of a Faraday screen is achieved. The earth connection is taken from the terminal marked *E* in Fig. 1, and this constitutes the sole earth on the whole equipment, so that there is no danger of circulating currents due to the presence of more than one earth lead.

Wavelength Range

The use of the apparatus described is not limited to any particular wavelength range, except in so far as the accuracy of the measuring instruments employed must tend to fall off on extremely short wavelengths. The author's experience has been limited to the medium broadcast band, and the method has not yet been developed for use on short waves. It is thought, however, that no insuperable difficulty should be encountered in extending the range of the apparatus to cover such wavelengths as 20 metres, but it is probable that some experimental work would have to be carried out before the results could be relied upon on so short a wavelength. No difficulty, however, should be encountered if it is desired to work the apparatus on long wavelengths, as it would only be necessary to carry out a few simple modifications to the high-frequency generator, in order to extend its wavelength range.

For the purposes of this article, the values of components suitable for a wavelength range of 200 to 500 metres are tabulated below, referring to Fig. 1.

Condensers

C_1	.0005μF.	variable.
C_2	.0005μF.	fixed, mica dielectric.
C_3	.01 μF.	,, ,, ,,
C_4	.0005μF.	,, ,, ,,
C_5	.01 μF.	,, ,, ,,
C_6	.0005μF.	variable.
C_7	.01 μF.	fixed, mica dielectric.
C_8	.0005μF.	,, ,, ,,
C_9	.0001μF.	variable.
C_{10}	.001 μF.	,,
C_{11}	.01 μF.	fixed, mica dielectric.
C_{12}	.0005μF.	,, ,, ,,
	.001 μF.	,, ,, ,,
	.002 μF.	,, ,, ,,
	.001 μF.	variable.

Resistances

R_1	20,000	ohms.
R_2	10,000	,,
R_3	250,000	,,
R_4	50,000	,,
R_5	1,000	,,
R_6	10,000	,,

Inductances

L_1	600μH.	
L_2	140 ,,	
L_3	40 ,,	
L_4	30 ,,	
L_5	60 ,,	tapped at 40, 30 and 20μH.

Test Instruments

Two instruments are required, an ammeter and a voltmeter, the former capable of measuring currents from 2 mA. to 2 A., and the latter voltages from 1 V. to 200 V. With instruments having these ranges, the limits of measurement would be from approximately 0.1 ohm to 200,000 ohms, a range of measurement likely to cover all cases normally encountered in practice.

The Ammeter

A first-class moving coil galvanometer possessing a thermal scale should be employed, in conjunction with a range of thermo-junctions giving the desired range of readings. In view of the fact that the square-law thermal scale of the instrument does not afford a range of accurate readings much greater than 3/1, the rating of the thermo-junctions should be chosen to give adequate overlap, viz., 2 mA., 6 mA., 18 mA., and so on.

The junctions may be calibrated on D.C. against a standard instrument, reversing the current through the junction, and taking the mean reading on the galvanometer. It has been found advantageous to enclose both

www.americanradiohistory.com

thermo-junction and galvanometer in a copper screening box, mounted on insulators; connecting the screen to the high-potential terminal of the junction. By this means, the ammeter is screened from earth, and current flowing through its earth capacity is not passed through the heater of the thermo-junction, and so does not influence the reading of the instrument.

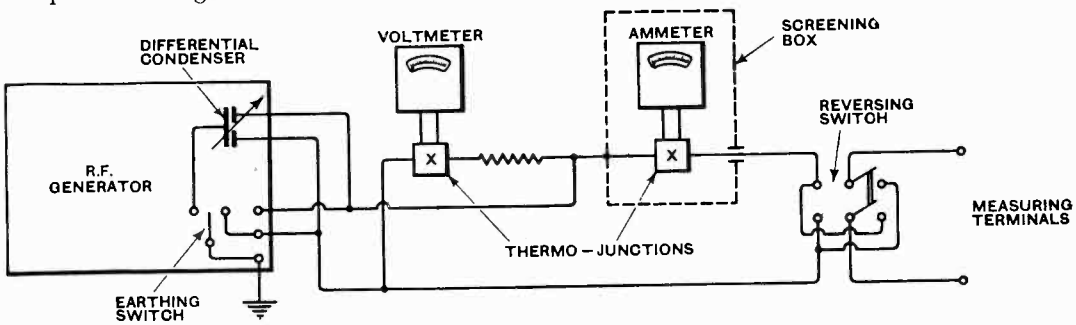

Fig. 3.—*Apparatus arranged for R.F. measurement.*

The Voltmeter

Several types of voltmeter may be employed, including electrostatic, and valve-operated instruments, but the author has obtained the most successful results by using a thermo-junction in series with a resistance of a non-reactive nature. A junction giving a full-scale galvanometer deflection for about 6 mA. is quite suitable, and may be used in conjunction with a resistance element wound non-inductively with No. 44 S.W.G. D.W.S. Eureka resistance wire. Excellent results may be obtained by constructing the resistance elements on ½in. cylindrical ebonite formers, the wire being wound on in a series of alternately reversed half-hitches, so closely that adjacent turns are in contact.

As the resistance of No. 44 Eureka is sensibly the same to D.C. as to A.C. up to 1,500 kc/s, the resultant voltmeter may be calibrated on D.C., and the author has found that the indications of such an instrument can be relied upon within an accuracy of the order of one per cent. on all frequencies up to 1,500 kc/s.

It is thought that the peculiar reliability of an instrument of this type is resultant upon its ability to indicate a true R.M.S. value of voltage, more or less regardless of the waveform of the applied voltage. This effect is, of course, inherent in a heat-operated instrument; but does not necessarily appear in a valve voltmeter. It is fairly well known, in fact, that the reading of valve voltmeters is liable to be largely influenced by the waveform of an applied voltage. In view of this fact, and the fact that the ammeter to be employed is a heat-operated instrument, it is quite logical to assume that the most consistent and reliable results would be obtained by the use of two instruments of a similar nature. This assumption is well borne out in practice, and the author consequently has no hesitation in recommending the use of this type of instrument for the voltage measurements.

The construction of resistance elements of the type described is somewhat laborious, and it is thought that metallised resistances could be used for the higher ranges of voltage; alternatively an electrostatic voltmeter might with advantage be employed.

Operation of the Apparatus

The apparatus is set up as shown in Fig. 3, with the voltmeter connected in shunt across the output of the H.F. generator, and the ammeter in series. It will be noted that the ammeter screening box is connected to its high-potential terminal, and a reversing switch is incorporated so that the connections to the circuit under test can be reversed at will. The exact arrangement of connections will depend on the nature of the measurement to be carried out, and it is proposed to describe in detail several measurements which, although they do not depart in general from the method described, demand variations in the detail of the procedure.

For instance, let it be supposed that a measurement is to be made of the resistance component of a tuned circuit. It is necessary to consider, first, the possible conditions

www.americanradiohistory.com

which may be encountered in practice, and these are briefly outlined below :—

(*a*) The case of a circuit which has a definite earth at one end.

(*b*) A circuit which is symmetric about earth, having a definite centre-point earth on the inductance, or between two condensers in series across the circuit.

(*c*) A circuit which has an earth not at the centre-point nor at one end, but definitely fixed somewhere between these points.

(*d*) A circuit which has no definite earth, but which has an earthy point somewhere, as a result of capacities to earth.

(*e*) A circuit which is not earthy at any point.

The case (*a*) represents the simplest type of measurement, and the circuit may be measured either in series or in parallel. In the series case, the circuit is interrupted at the earthy point, and the terminals of the measuring equipment connected in series with either the inductive or capacitative limb of the circuit, earthing the output terminal of the H.F. generator by means of the switch previously described, and taking care that the reversing switch is in such a position that the earths are not crossed over so as to short-circuit the apparatus. The output circuit of the H.F. generator is switched for series operation for a measurement of this type. Whilst it is not possible to lay down a hard and fast ruling in this connection, it is safe to say that when measuring a low impedance, the output circuit of the H.F. generator can advantageously be operated as a series combination, whereas, when measuring a high impedance, the parallel connection should be employed.

It will be appreciated that the resistance of the output circuit of the H.F. generator does not influence in the slightest the result of the measurement being carried out, neither is it necessary for this circuit to be strictly in tune. The accuracy of this contention will more readily be understood when it is recalled that the case is exactly parallel to that involved in the measurement of a resistance with the aid of a battery, a voltmeter, and an ammeter ; measuring the voltage across the resistance and the current flowing in it. A moment's reflection will show that the internal resistance of the battery does not have the slightest influence on the result obtained. Variation of the output coupling and tuning of the H.F. generator, therefore, should not alter the ratio of voltmeter to ammeter reading when measuring a given impedance, and it is desirable that the operator should verify that this is the case whenever that apparatus is in use, for, if it be so, it is concrete proof that no unwanted spurious coupling, either static or magnetic, is present.

The H.F. generator is then put into operation, tuning the oscillator to the desired frequency by means of a wavemeter, and adjusting the doubler and power amplifier stages to minimum anode current. This process can advantageously be accomplished at a low value of anode voltage, reducing the output of the motor-generator by means of the rheostat previously described. The output coupling should be set to zero during the tuning up process, and when the apparatus is operating at full anode voltage it should be verified that no potential exists across the output terminals until the magnetic coupling is tightened to a certain extent. This is a further valuable proof that no unwanted static potential is finding its way through to the output circuit.

The coupling should then be tightened up and a suitable range for the voltmeter and ammeter found by trial and error. Having found a convenient setting for the ammeter and voltmeter, the circuit under test should be tuned until the ratio E/I is a minimum, whereupon E/I, in terms of the calibration of the instruments, is the series resistance of the circuit.

Turning to the parallel measurement case, it is necessary to connect the measuring terminals in shunt with the circuit under test, and switch the H.F. generator output circuit to the parallel connection. The circuit being measured is then tuned to the point where E/I is a maximum, and the value of its shunt resistance obtained. From the expression L/CR, and the shunt resistance measured, the series resistance may be calculated with an accuracy sufficient for practical purposes. It is the author's opinion that it is preferable to make a series measurement wherever practicable, because, generally speaking, the voltages employed for series measurements are much smaller than those necessary for the equivalent

www.americanradiohistory.com

parallel measurements, with the result that errors introduced by spurious capacities are of less significance.

Case (*b*) does not present any serious difficulty, as series measurements can be made as for case (*a*), not forgetting to take the earth off the output terminal of the H.F. generator. Measurements are likely to be more accurate, however, if the measuring terminals can be tapped into the circuit under test at the point where the earth connection is affixed. Parallel measurements are easily and accurately made on a circuit of this description by connecting a differential condenser across the output terminals of the H.F. generator, the moving vanes being earthed. Neither output terminal is earthed, and the adjustment of the differential condenser is varied until the current in both legs of the measuring circuit is equal. This fact is ascertained by use of the switch provided for reversing the output and implies that a balance has been reached between the earths on the circuit under test and the testing circuit. When the desired balance has been achieved the value of E/I is the shunt resistance of the circuit, which is assumed to have been tuned until E/I is a maximum.

A similar technique is employed in measuring the impedance of balanced networks or feeder lines, of which the characteristic impedance may easily be determined, by measuring the impedance with the far end opened and then closed. The characteristic impedance is then given by the geometric mean of the values so obtained.

Cases (*c*) and (*d*) call for practically the same treatment as case (*b*), except that it is better to attempt series measurements in case (*c*) only, taking care to tap in at the earthy point. In the case of parallel measurements there should be little difficulty in obtaining a balance with the aid of the differential condenser as before.

Case (*e*) is one which is rarely encountered in practice, and as so many factors might be involved, the author is hesitant in dealing with it in a general way, but considers that the exact *modus operandi* should be left to the discretion of the operator.

Aerial Measurements

A very fruitful field of application of the apparatus lies in the measurement of aerial resistances, and the plotting of resistance, reactance, and impedance/frequency characteristics. When the aerial under consideration tends towards the quarter-wave type, the measurement is made in series with the aerial, including in the circuit a variable reactance, which may be inductive or capacitative dependant upon whether the aerial is shorter or longer than the quarter-wave. The H.F. generator is tuned up to the working wavelength, and the variable reactance adjusted until the ratio E/I is a minimum. The value so obtained is the resistance of the aerial, and the value of the reactance in series with the aerial is equal and opposite to the reactance of the aerial itself at the frequency in question. By varying the frequency of the H.F. generator a kc. at a time, and repeating the measurements at each frequency, values of resistance and reactance for the desired frequency band may be obtained. An impedance/frequency characteristic may also be taken by leaving the tuning reactance at the value obtained at mid-band frequency, and repeating the run.

If the aerial under test tends to the half-wave, the procedure is the same as before, except that the H.F. generator output circuit will be switched to the parallel connection, and the variable reactance adjusted until the impedance is a maximum value. As an alternative method, the aerial may be fed by means of a parallel circuit, connected between it and earth ; the measurement in this case being made in series with either limb of the circuit at the earthy end. To determine the natural resonance of the aerial, a measurement is made in series with the aerial and earth, no reactance being included in the circuit. The frequency is then varied until the ratio E/I is a maximum, which occurs at the frequency of the natural response of the aerial. A similar measurement may be applied to the quarter-wave aerial, varying the frequency until the impedance is a minimum.

The foregoing examples of the use to which this apparatus may be put are merely intended to indicate some useful applications, but by no means to define the limits of its useful scope ; and it is felt that in the hands of a skilled operator, having due regard for the precautions outlined, its uses may be almost unlimited.

www.americanradiohistory.com

The Detector Load*

Some Experiments in Optimum Amplifier-Detector Coupling

By W. F. Cope, B.A.

SUMMARY. Measurements have been made to check the accuracy of the conclusions relating to amplifier-detector couplings put forward by Colebrook.[1]
These conclusions are substantially confirmed.

COLEBROOK[1] has recently investigated analytically the case of a tuned radio-frequency amplifier which is supplying power to a detector. As his conclusions are not what would be expected *a priori* it is desirable to check them experimentally. This article is an account of such experiments, which it may be said in anticipation confirm his analysis satisfactorily. For simplicity and because the two articles are really one in subject matter his notation has been adopted.

The circuit arrangement which was available is given in Fig. 1. For a full treatment of this method of R.F. amplification the reader should consult the original paper.[2] It is sufficient for the present purpose to describe it as two triodes resistance capacity coupled, the input and output of the system being coupled to tuned circuits. With a suitable choice of coupling components the

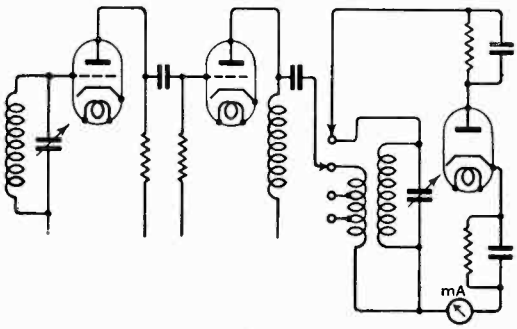

Fig. 1.

amplifier is inherently stable, gives a gain comparable with that of a single tetrode stage and has an input-output curve which is linear over a very wide range. It was, therefore, very suitable for the purpose in view. The output circuit is a transformer of the high-efficiency "Everyman 4" pattern—main winding 68 turns 27/42 Litz, subsidiary winding 30 turns of fine wire tapped at 15

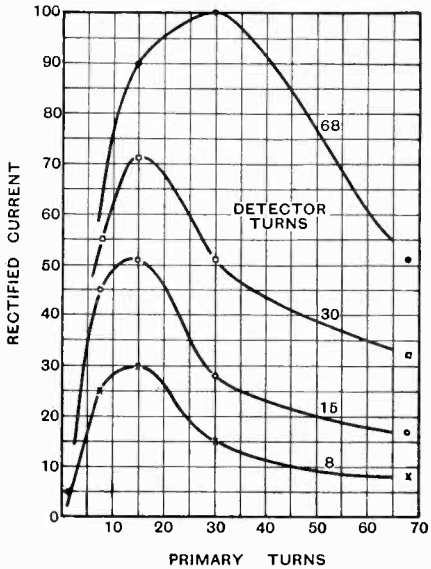

Fig. 2.

and 8 turns overwound at the low potential end—shunt fed from V_2. By altering the tapping of the anode and detector connections it was possible to vary L_1 and L_3 and with them α_1 and α_3 over a wide range. For convenience the winding which was actually in shunt with V_2 has been designated "primary" regardless of whether it was the main or subsidiary winding of the transformer.

The observations were made in daylight using the London Regional transmitter as a source of signals, and, though the conditions

* MS. accepted by the Editor, November, 1934.

www.americanradiohistory.com

under which the experiments were made precluded the attainment of high precision, it is thought that the accuracy is sufficient to justify the conclusions drawn. Those quantities which were known or calculable beforehand are tabulated below:

$$R_1 = 11\ \text{K}\Omega.$$
$$R_2 = 6\Omega.$$
$$L_2 = 280\ \mu\text{H}.$$
$$\omega = 5.2 \times 10^6.$$
$$a_2 = 4 \times 10^{-3}.$$
$$R_3 = 50\ \text{K}\Omega.$$

The method of experiment was to adjust L_1 and L_3 to a predecided value and tune to resonance. The detector current was then read. By varying the tappings, all the possible combinations of L_1 and L_3 were obtained. As the absolute value of the detector current is of no significance in this connexion the results have all been expressed as percentages of the maximum current reading obtained. Apart from the necessary retuning no other adjustments of any kind

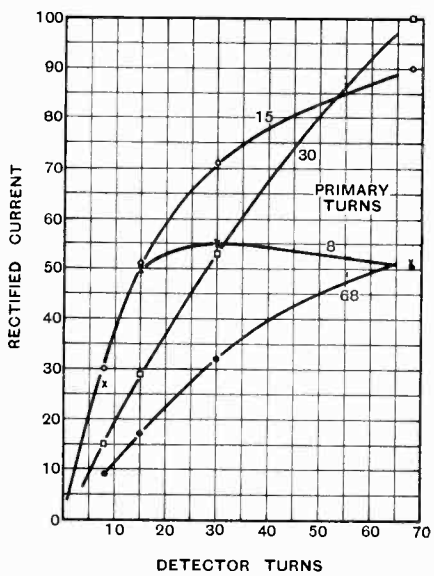

Fig. 3.

were made, and it is therefore probable that the various detector currents are truly comparable.

The results obtained have been given in the table and plotted in Figs. 2–4. Fig. 2

TABLE OF RESULTS.

Primary Turns.	Detector Turns.	Rectified Current.
8, 15, 30, 68	8	27, 30, 15, 9
8, 15, 30, 68	15	45, 46, 28, 17
8, 15, 30, 68	30	55, 71*, 51, 32
8, 15, 30, 68	68	50, 90, 100, 51

* Good approximation to $a_1 = a_2 = a_3$ see text.

Turns Ratio Py/Det.	Detector Turns.	Rectified Current.
2 : 1	8, 15, 30	30, 28, 51
1 : 1	8, 15, 30, 68	27, 46, 51, 51
1 : 2*	15, 30, 68	28, 71, 100
1 : 4	30, 68	51, 90

* Approximately $a_1 = a_3$.

illustrates what happens if a_1 is altered while a_3 is kept constant for a series of values of a_3. Fig. 3 is the same as Fig. 2, with the rôles of a_1 and a_3 interchanged. Fig. 4 illustrates the effect of varying both a_1 and a_3, keeping their ratio constant at the values indicated. The 1 : 2 ratio for primary to detector turns corresponds approximately to $a_1 = a_3$. Broadly speaking, the shape of the curves is consistent with the theoretical analysis. In particular there is no maximum with respect to a_1 for the condition $a_1 = a_3$ the curve rising asymptotically to a value

www.americanradiohistory.com

which can only be guessed, but which might plausibly be put at 110. The case in which the turns ratio is 1 : 2 with 30 turns in the detector circuit is of especial interest as it corresponds to the nearest realisable approximation to $a_1 = a_2 = a_3$. According to

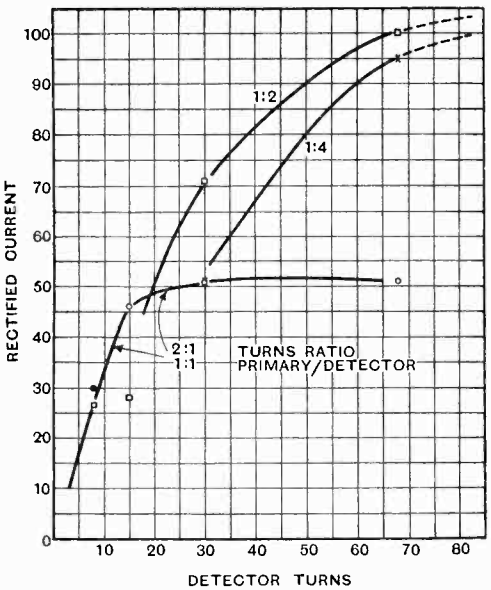

Fig. 4.

theory [eqn. 62] the output should be $4/9 = 45\%$ of the asymptotic upper limit: the measured value is $(71/110)^2 = 42\%$. While this close agreement may be fortuitous the general shape of the curves and the numerical agreement strongly suggest that the main conclusions of the analysis are correct. It is also worth mentioning that the predictions of the analysis about selectivity were also fulfilled: tuning was noticeably broader at maximum output than for $a_1 = a_2 = a_3$.

REFERENCES.

1. Effect of the Detector Load on Transformer Design. F. M. Colebrook. *Wireless Engineer*, August, 1935.
2. A Study of the Possibilities of Radio Frequency Voltage Amplification with Screen Grid and with Triode Valves. F. M. Colebrook. *Journal I.E.E.*, Feb., 1934.

New Books from Abroad

Radiation from a Vertical Antenna over Flat Perfectly Conducting Earth.

By P. O. PEDERSEN, 50 pp. with 35 Figs. G.E.C. Gad., Copenhagen. 6 kr.

This is a monograph by the well-known Danish scientist, who was formerly known as the colleague of Poulsen in the development of the arc generator, and who is now the Principal of the Copenhagen Technical College. It embodies the results of an investigation undertaken at the suggestion of the Danish Postal Administration. It is a straightforward discussion of the problem, starting from Hertz's equations and establishing formulae for the radiation distribution and radiation resistance for vertical aerial sunder various conditions of height and frequency. It is written in Professor Pedersen's usual clear style, with all the necessary tables and curves, and it is in English.

Miscellaneous Papers by Professor P. O. Pedersen, pp. 104. G.E.C. Gad., Copenhagen. 6 kr.

This publication of a number of papers in English which had previously appeared in other languages was proposed by friends to mark the author's sixtieth birthday. They embrace "On the Development of the Electrical Communication Technique and Danish contributions to the same," a lecture delivered in honour of the twenty-fifth anniversary of Poulsen's first experiments in radio telephony, a speech delivered on the occasion of the centenary of the Royal Technical College of Copenhagen, a lecture on progress in scientific-technical development, a lecture on the depreciation of public utilities, and a bibliography of all Professor Pedersen's publications, numbering 97 items.

Vingt-cinq Années de T.S.F.

This is a sumptuously produced volume of 221 pages issued by the Société Française Radio Electrique to celebrate the twenty-fifth anniversary of the foundation of the concern. It contains very well-illustrated descriptions of all the activities of the Firm during the last twenty-five years, which is only another way of saying that it is a historical review of the development of radio-telegraphy during this period. It contains, moreover, highly scientific articles on such subjects as Chireix's method of modulation "par déphasage" by the inventor. Among the large number of photographs are full-page pictures of Bethenod, Brenot, Girardeau, and other leaders of the French radio industry. We congratulate the Company on the production of this volume.

G. W. O. H.

www.americanradiohistory.com

Olympia, 1935

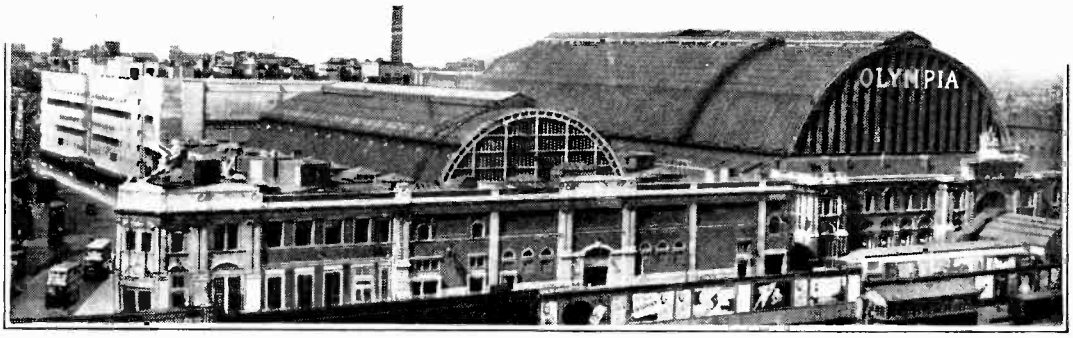

A Summary of Technical Progress Revealed at the Show

IT is perhaps poor consolation to those in search of technical interest that the absence of radical changes in receiver design is a benefit both to the manufacturer and to the owners of last year's receivers. But the fact is that with the high power of modern transmitters, the sensitivity of receivers had already reached a very adequate level, automatic volume control systems were able to compensate for changes of signal-strength due to fading (one cannot expect to cure the distortion due to selective fading) and selectivity was generally good, though sometimes at the expense of too great a sacrifice of quality of reproduction. Accordingly, the chief claim of broadcast receivers this year, apart from improvements to Q.A.V.C. systems, is of improved quality, usually secured with the aid of variable selectivity: a novelty last year, this may now be regarded as standard practice in the better class of receiver. There are also various small receivers, usually one H.F. stage, detector, and output valve, in which the selectivity is not so great as to cause serious loss of high notes; for local-station reception in places where high selectivity is not essential, these should give better quality in proportion to their cost than more ambitious designs. The other conspicuous development is the "all-wave" receiver, which provides for short-wave reception in addition to the broadcast bands; the ingenuity of the designer, less heavily taxed than before with broadcast problems, can find ample scope in this direction.

Variable Selectivity

The most popular method of varying selectivity is by mechanical movement of the coils comprising the I.F. transformers, so changing the mutual inductance coupling between them. Sometimes continuous variation is provided, but variation in say three steps may be advantageous, since this makes it practicable to vary the circuit resistance as well, avoiding a response with accentuated double peaks in the wide-band (tightly-coupled) position; it is in addition possible to arrange simultaneous switching of A.F. tone-correcting circuits, so as to obtain a sharp cut-off. In the Cossor model 836 radiogram, for example, a superheterodyne including a signal-frequency amplifying stage, there is a three-position control giving (*a*) response up to 9,500 c/s. (this involves modification of *all* tuned circuits, not merely I.F. couplings); (*b*) a high-selectivity position giving a very sharp cut-off at 6,500 c/s.; (*c*) "noise-suppression," involving a filter cutting at 3,500 c/s. Switching out the whole of the I.F. amplifier is still employed on R.G.D. models 1202 and 704, but the all-wave types 1203 and 705 have

www.americanradiohistory.com

variable-selectivity 465 kc/s. I.F. circuits; with two I.F. stages there are three pairs of circuits, of which two pairs are varied while the third is left at high selectivity, so that it checks any tendency to double peak in the overall response curve. Although 465 kc/s is the most popular intermediate frequency for variable selectivity, it is not universal.

Fig. 1.—*The Orr AC45 receiver for which the makers publish response curves.*

The Philips type 575A all-wave receiver has continuously variable selectivity on 115 kc/s I.F. transformers; in addition, this receiver has a high-note correction obtained by resonance on the leakage inductance of the output transformer, and a low-note correction to compensate for the loud-speaker characteristic, the overall response to the speaker terminals being within ± 3 db. between 60 and 4,000 c/s, and less than 12 db. down at 8,000 c/s. The output of this receiver is a triode with 12 watts anode dissipation. Another receiver for which response curves are published is the Orr "Invicta AC 45," a 4-valve and rectifier superheterodyne with variable selectivity in 127 kc/s intermediate frequency amplifier; with minimum selectivity the response is within 5 db. at 5,000 c/s, and 9 db. down at 8,000 c/s, while in the most selective position there is cut-off at 4,000 c/s. An alternative method of varying coupling, used by All Wave International in the 80 kc/s I.F. amplifier of their "Commander" receiver, is by varying a resistance shunted across a third coil coupled to the I.F. transformer, while an exceptional case is the Dynatron "Ether Emperor," which is a straight set with two signal-frequency amplifying stages and three pairs of tuned circuits. It is claimed that the use of "iron-cored" (actually "Gecalloy") coils in this receiver maintains substantially constant performance on all frequencies, and with three degrees of selectivity the tuned circuit resistances and both inductive and capacitive couplings are varied, so as to maintain a square-topped response for each degree of selectivity and for all frequencies.

Variable-coupling I.F. transformers for variable selectivity are manufactured by Sound Sales, Varley, Wright and Weaire (Wearite) and Colvern; the last-named, illustrated in Fig. 2, is a particularly neat arrangement employing a pair of Ferrocart-cored coils, one of which rotates about an axis parallel to that of the screening box. A transformer on 465 kc/s for control of coupling by third coil and resistance is made by Bulgin.

Small Sets

Among the small receivers may be mentioned the 3-valve Cossor A.C. model 368, which has a triode output valve, and the Philips type 940A, a 2-valve receiver with

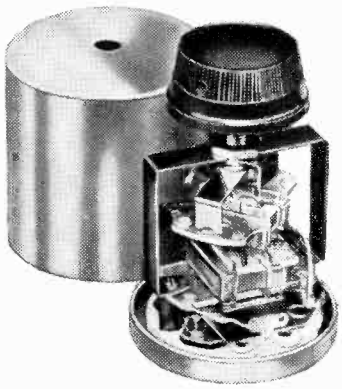

Fig. 2.—*Colvern variable selectivity I.F. transformer with Ferrocart-cored coils.*

pentodes for both detector and output valves. There is also the Ferranti "Una," with pentode H.F. stage, triode detector, and

www.americanradiohistory.com

pentode output; this receiver has a "Droitwich rejector" which is brought into operation on long waves if the aerial is connected to a separate terminal provided.

Tuning Indicators

With high selectivity, accurate tuning is essential to good-quality reproduction, and many receivers employ a neon tuning indicator; in addition to the Cossor neon

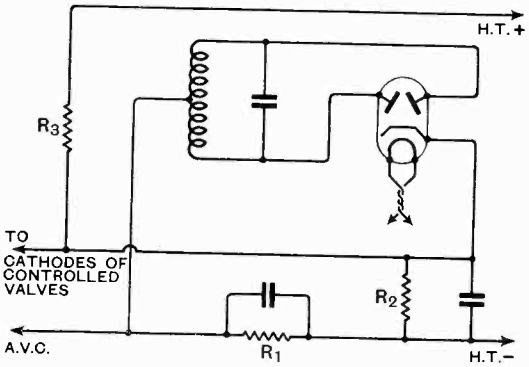

Fig. 3.—*Q.A.V.C. system in the All Wave International "Commander" receiver.*

tube, there is now the G.E.C. "Tuneon." But several manufacturers are entirely eliminating the tuning indicator by arranging the A.V.C. system so that full volume is only obtained when the receiver is exactly tuned, and "side-band screech" is prevented. One or two circuits were described last year, and this year both Pye ("Aural Tuning") and Cossor have systems of Q.A.V.C., which have the same effect as that introduced last year in the H.M.V. "High Fidelity" radiogram, namely that the muting valve does not allow signals to pass until the tuning is set exactly to resonance. The Cossor model 836 (9-valve and rectifier superheterodyne) has exceptionally good A.V.C., which is stated to keep the output within 2db. for inputs between 2 microvolts and 1 volt; and since its muting system is operated by a carrier, it gives good discrimination against noise, remaining closed against noise of higher *audible* level than the weakest signal which it passes. Although this is an A.C. receiver, a "universal" double-diode-triode is employed for control of the muting, since it is a higher magnification triode than the A.C. type (Cossor 13 DHA, $\rho = 83{,}300$ ohms, $\mu = 125$). There are various methods in use where it is desired to obtain Q.A.V.C. without additional valves, and a typical system, to be found in the All Wave International "Commander" receiver, is represented diagramatically in Fig. 3. The cathode of the diode rectifier is biased positively by the passage of the anode current of the controlled valves, together with the current passed by R_3, through the resistance R_2 (which is adjustable); a signal at the detector less than the bias so produced will be ineffective, but one in excess of it will be rectified, produce A.V.C. bias reducing the anode current of the controlled valves, and hence reduce the voltage across R_2 to a small value, so that the signal can be rectified and passed on to the A.F. circuits in the usual manner. In the Ekco model 86 Q.A.V.C. is obtained by returning the D.C. path from the signal-diode anode to the cathode of the frequency-changing valve, while the cathode (actually a double-diode-triode valve is used) of the

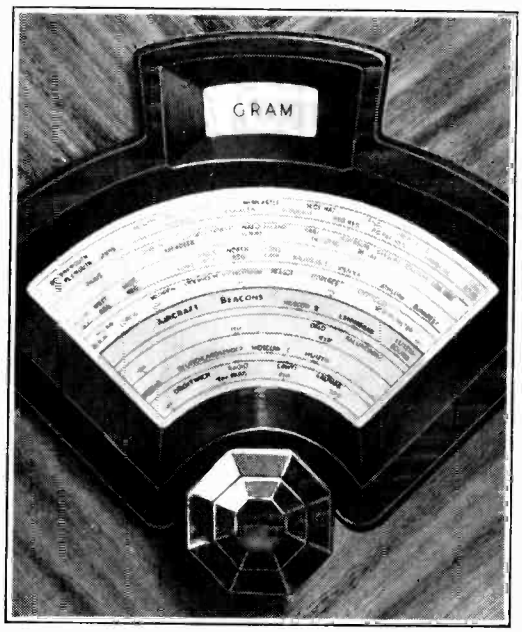

Fig. 4.—*The clearly legible scale of the C.A.C. tuning dial.*

diode is connected to the cathode of the I.F. amplifier. The signal diode circuit is therefore active or quiescent according as the cathode of the frequency-changer or I.F.

www.americanradiohistory.com

amplifier is at the higher potential (both these cathodes are above earth potential by virtue of their individual bias resistances) and this depends upon the anode currents of these two valves which are in turn controlled by A.V.C. (derived from the other diode of the double-diode-triode).

Tuning Dials and Controls

The other tuning requirement is a clearly legible scale, and a new method of compressing a long scale into a reasonable size of

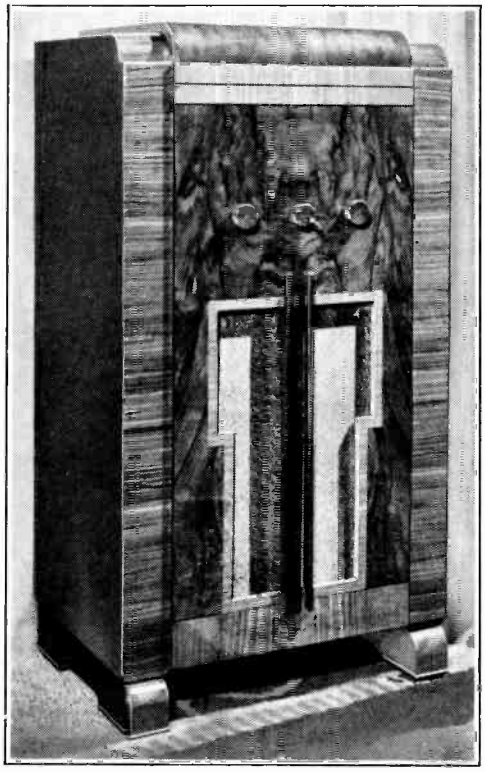

Fig. 5.—*Philips 587U console.*

panel opening is the successive traversing of a spot of light over two or three parallel tracks for a single half-revolution of the condenser shaft. In the C.A.C. "Scanning Disc Tuning Dial," illustrated in Fig. 4, there is a disc behind the transparent scale which has two staggered holes for each wave-range, resembling a very coarse television scanning disc; when the first hole has traversed the whole of the outer track on the scale, the second follows on an inner parallel track. Three parallel tracks for each waveband are to be found on the Kolster Brandes "Phototune" dial, and these are scanned in succession by spots of light from three slits in a rotating drum whose axis is parallel to the panel. But where space permits, there is much to be said for a long straight scale, such as used in the Cossor 836 radiogram, on glass. Since scales are practically all station-calibrated, they are interchangeable in case of alteration of wavelengths, and the expense of a change is reduced to a minimum in Philips all-wave receivers by printing the scale on a thin slip of transparent material which is sandwiched between two stout celluloid plates. Accuracy of calibration is a further feature of this receiver; the drum driving the metal tape which carries the pointer across the scale is mounted eccentrically on the shaft of the condenser, and with the additional adjustment provided by this it is possible to make the scale right at *three* points.

The placing of controls on console and radiogram models seems to be a vexed question; R.G.D. have even produced two alternatives in the 12-valve model, of which the cheaper has the controls beside the gramophone turntable, while the other retains the inclined front panel arrangement. Philips, in the console model of the 587U (A.C./D.C. 4-valve and rectifier superheterodyne), have divided the controls in a way which Fig. 5 shows to result in a very pleasing appearance; on the front panel, just above the loud speaker, are the volume, wave-change and mains switch, and tuning controls, while the tuning scale and the secondary controls, such as noise-suppressor adjustment, are concealed beneath a lid on the top of the cabinet. One or two manufacturers have followed up the tendency to concentrate control in as few knobs as possible; for example, Kolster Brandes have attached to the tuning control a dog-clutch action, so that by pressure it will work the wave-change switch. As an extreme case, Decca receivers have only two concentric knobs; the outer for tuning, while the inner controls on-off switch and volume control by rotation, and wave-change by push-pull action.

In the past almost all commercial receivers

www.americanradiohistory.com

have had built-in loudspeakers, but there are this year two new supporters of the separate speaker: R.I. have a receiver, developed primarily for the reception of broadcasting in schools, for use with an external loudspeaker, and the C.A.C. Super Seven (superheterodyne radiogram) is supplied with the speaker in a separate cabinet. The emphasis on "quality" has led nearly every manufacturer to use some special form of loudspeaker cone, whether curved, centre-stiffened, or double cone; the Wharfedale "Bronze" speaker has an exponentially curved cone, which is claimed to reduce both cone resonances and concentration of high notes in a narrow beam. Another Wharfedale product is the "Truqual" volume control, which is designed to maintain approximately constant impedance loading on the receiver output, using both series and shunt resistances controlled by a 5-position switch; it is only for use on speech-coil circuits of low impedance (up to about 8 ohms maximum). The use of a separate reproducer for high notes ("tweeter") is well known, but both the main cone and the high-note horn reproducers are ingeniously combined in the Whitely Electrical "Duplex" loudspeaker illustrated in Fig. 6. This is a permanent-magnet model in which a hollow central pole-piece is surrounded by an annular gap in both front and back end-plates; the main speech-coil, driving a $7\frac{1}{4}$in. cone, is mounted in the front gap, while in the smaller gap at the back of the magnet system there is a coil attached to an aluminium diaphragm, capable of responding to high frequencies, which delivers its sound output through the hollow pole-piece to the horn seen in the centre of the front of the speaker.

Permanent Magnets

A new alloy for permanent magnets (used by both Swift Levick and Darwins) includes aluminium, nickel, and cobalt; this has a greater remanence than the nickel-aluminium alloy, though no greater coercive force, and hence a higher maximum value of the $B \times H$ product. A range of loudspeaker magnets on the Darwin stand, built with different alloys but having all the same size of air-gap and same flux-density, showed that 10 ozs. of nickel-aluminium alloy would do the work of 58 ozs. of chrome-steel, or 19 ozs. of 35 per cent. cobalt steel.

Rack-mounted loudspeaker-response measuring apparatus by Tannoy is entirely mains-driven, and consists of a beat-note generator (employing amplitude-controlled dynatron oscillators) to feed the speaker, a slack diaphragm condenser microphone, amplifiers up to a final level of 10 watts, incorporating a corrector circuit for the microphone characteristic, and an output

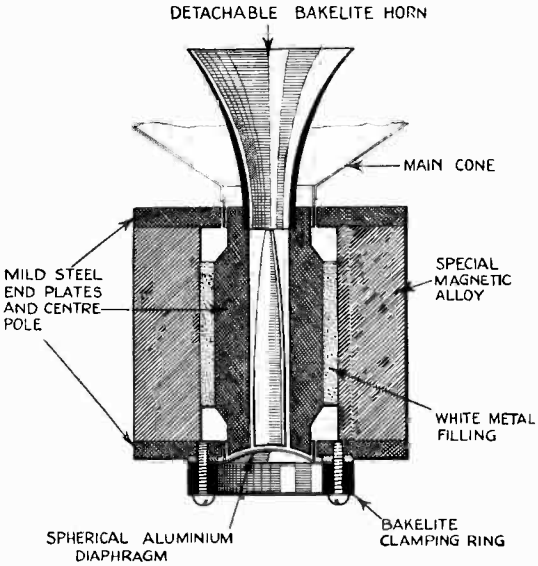

Fig. 6.—*Sectional diagram of the W.B. "Duplex" speaker.*

meter. The latter is a recording voltmeter fed through a Westinghouse bridge rectifier, and fitted with another metal rectifier as shunt so as to give a logarithmic scale. This equipment can also be used to obtain the response curves of gramophone pick-ups by employing a constant *amplitude* record and a correcting circuit to allow for the linear change with frequency of the amplitude/sound-intensity ratio. The condenser microphone is also available separately, response within $\pm$ 5db. from 50 to 16,000 c/s., and has a 2-stage amplifier, employing the new Marconi type A537 silent valves, built into its stand.

A carbon microphone with a response curve claimed to be within $\pm$ 5db. between 40 and 20,000 c/s. is the T.M.C. "VariDep"; this

www.americanradiohistory.com

is a transverse-current microphone with both the thickness and width of the carbon layer varied along the length of the current path. The response curve of this microphone was obtained very simply by placing a metal grille in front of it and applying an alternating potential of controllable frequency between this and the carbon of the microphone, so that the electrostatic force moved the grille and set up a sound-pressure on the microphone; a balanced circuit was of course used, to avoid capacitive feed of the energising voltage to the amplifier receiving the output of the microphone.

P.A. Equipment

A truly "universal" portable amplifier for use on records or microphone is the Tannoy 10-watt model shown in Fig. 7; this can be worked from 200–250 volts A.C. or D.C. supply, or from a 12-volt battery, in the latter case using a rotary converter for H.T. current. The change-over is effected by a multi-pin socket and separate plugs for 200 volts or 12 volts which connect the valve heaters in series for high voltage or parallel for 12 volts as well as making the necessary H.T. connections. In addition to portable amplifiers of both microphone first amplifier and power types, R.G.D. construct rack-mounted equipments to meet all requirements. A feature of all their amplifiers is the use of resistance coupling, together with the paraphase system, to secure maximum fidelity; and the mixing unit employs a buffer valve in each in-coming line, so that it is possible to mix any selection of inputs, whatever their impedances. There are also separate tone-controls for both top and bass corrections. Ferranti, on the other hand, have designs for two transformer-coupled amplifiers, one of 6 watts and the other of 12 watts output, with a response within ½db. up to 10,000 c/s.

Fig. 7.—*Tannoy GUB10 portable amplifier.*

For the Short Waves

The short-wave converter unit of the autodyne type has largely disappeared, owing to the increasing demand for selectivity on short waves and the development of all-wave receivers. An exceptional converter unit is to be found in the Dynatron all-wave receiver, a straight set in which the H.F. stages are employed as I.F. for the short-wave combination; in common with most all-wave circuits, the short-wave unit here has a triode-hexode frequency-changer and fully tuned signal-frequency amplifying stage, incidentally with iron-cored coils still on 15 metres. Typical all-wave receivers, with a fully tuned signal-frequency stage, are the Philips, Unirad, and R.G.D., the latter retaining a separate oscillator (HKF. pentode in Dow Circuit) coupling in to the first grid of a heptode used as first detector; reduced tuning capacities are desirable on short waves, so each tuning condenser in the R.G.D. receiver is split into 0.00015 plus 0.00035, the 0.00015 section being used alone on short-waves, and the full 0.0005 on broadcast bands. The usual intermediate frequency for all-wave receivers is 465 kc/s., but the All Wave International "Commander" has double frequency changing; the tuned signal-frequency amplifier is followed by a triode-hexode changing the frequency to 1550 kc/s., and this feeds, without any amplifying stage between, into an octode (fitted with trap circuits to suppress harmonics) changing the frequency to 80 kc/s. Another interesting feature of this receiver, which covers from 12 to 560 metres without a break, is the "folded chassis" which can be seen in Fig. 8; the radio-frequency valves are mounted horizontally "head-to-tail," so that the anode terminal of one is adjacent to the grid of the next, while the screening zig-zags between. The same firm also makes a 2-valve midget receiver, which is super-regenerative on 10 to 60 metre ranges, but a

www.americanradiohistory.com

normal regenerative receiver on 200–550 and 800–2,000 metres.

Though television is strictly excluded from the exhibition, one can see a reflection of interest in this direction in the specialised ultra-short-wave components. There are, for example, silver-plated coils on the stands of both British Television Supplies and Bulgin, and the latter have also a 15 mc/s. tuning coil with trimming condenser, for use in an I.F. amplifier for ultra-shorts, which is said to make possible a stage-gain of about 10 over a band-width of 1 mc/s. (drop of about 5 per cent. at the limits). For short-wave work there is a Polar variable condenser with steatite insulation, and there are air-dielectric fixed condensers by both Bulgin and Cyldon. The latter also have a series-gap condenser for ultra-short-wave work, and some special type condensers, in capacities from 0.0001 to 0.002, with cast aluminium end-plates, mycalex insulation, and, if required, ball bearings as well.

Transmitting and Receiving Valves

The stability in receiver design is naturally accompanied by an absence of new types of receiving valve; but for transmission on ultra-short waves there are two new Ediswan valves, the E.S.W.501 to dissipate 60 watts, and the E.S.W.204 to dissipate 250 watts. A new Osram power-amplifying valve is the DA 30, which is similar in construction to the PX 25, but has a greater factor of safety, so that the dissipation is raised to 30 watts at 500 volts; it is intended for use in a push-pull circuit with a comparatively low impedance load (about 4,000 ohms) and a pair can be made to give an output of 45 watts with little third harmonic distortion.

The triode-hexode frequency-changer is made by Osram in both 13-volt "universal" type ("X 31") and 4-volt A.C. ("X 41"), but the most important Osram development is in silent valves for use in microphone amplifiers and other circuits where a very high gain follows. Chief of these is the "A 537," a triode of smaller size than standard valves, built with special precautions to avoid noise due to leakage between electrodes, etc.; there are also modified ML 4 and MH 4 valves (known as ML 40 and MH 40) which have steatite insulators to position the electrodes and the grid brought out to the top of the bulb in the interests of reducing noise.

There are minor changes in Mullard valves, the "Universal" series being obtainable with either the standard pin base or the special Mullard side-contact base, which was introduced last year; and the heater current of several of the 4-volt A.C. valves has been reduced to 0.65 amp.

The Harries tetrode output valve, described in *The Wireless World*, August 2nd, is among the Hivac series, together with a variable-mu double triode for volume-expansion. The use of a double valve, in push-pull circuit, eliminates the distortion which would otherwise result from the curved characteristic of a variable-mu valve, and a control ratio of 10 : 1 can be obtained. On this stand also was a comprehensive range of midget valves, a screened-grid (*see* Fig. 9) and three different triodes, all rated at 2 volts 0.06 amp. filament consumption, and a pentode rated at 2 volts 0.12 amp.

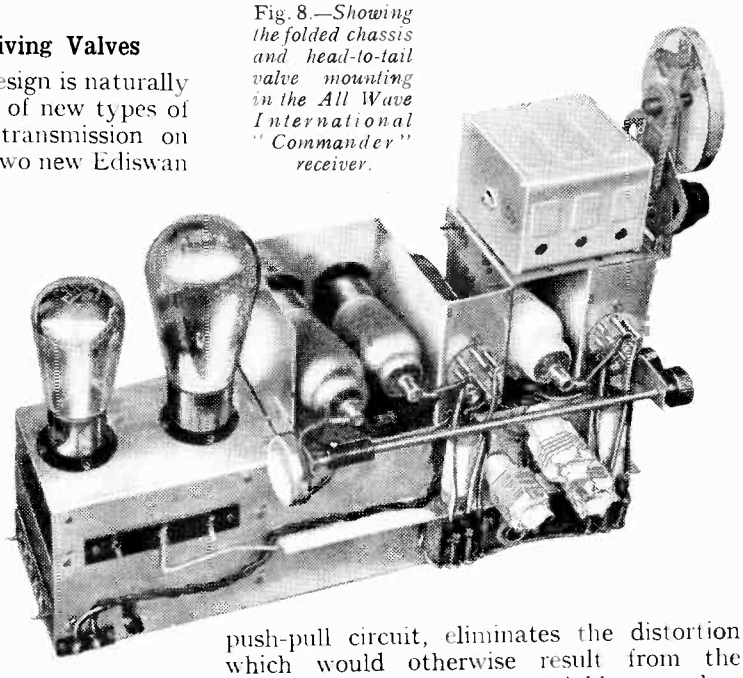

Fig. 8.—*Showing the folded chassis and head-to-tail valve mounting in the All Wave International "Commander" receiver.*

www.americanradiohistory.com

filament current; the last-named has an anode current of 3 mA. at 100 volts, and so may be expected to give an A.C. output of between 100 and 150 milliwatts. A useful feature of these valves is that for short-wave work the screened-grid and triodes can be supplied with frequentite bases; special

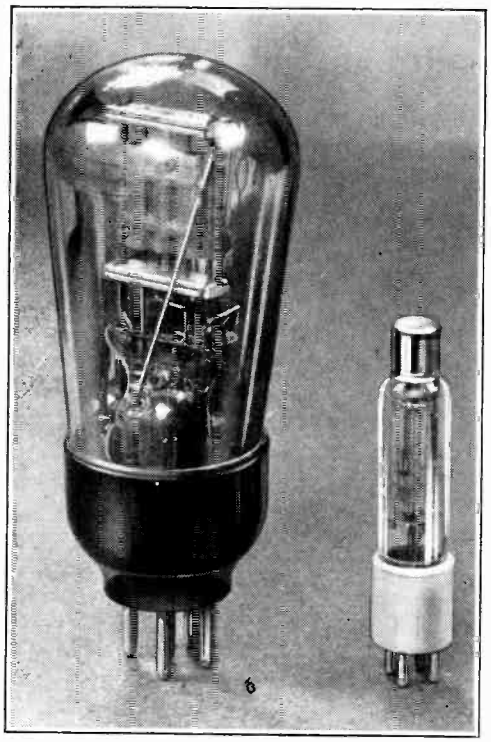

Fig. 9.—*Osram ML40 and Hivac midget S.G. valves.*

holders are required for these midget valves, and have been added to the large range of Clix valveholders.

Midget Valves

Midget valves have made possible the pocket receiver, such as the Empiric model illustrated in Fig. 10 which works a single ear-piece. It has a self-quenching super-regenerative detector and a low-frequency amplifying stage, and a frame tuned over the medium wave-band by a compression condenser; its battery consumption is ¾ mA H.T., and 0.12 mA L.T., and weight complete 1 lb. 15 ozs. There is also an Empiric midget portable receiver with loud-speaker weighing 6¾ lbs.; this is a straight 4-valve set with midget screened-grid, detector, and first A.F. amplifying valves, and a standard output valve (PP220).

There are various car-radio receivers, usually with remote control from a unit fitting on the steering column; but a useful variation is the Decca combined home and car radio, which is available as either a 4- or 6-valve superheterodyne. This has a self-contained rotary converter to obtain H.T. from a 12-volt car battery, and is supplied with two connecting leads, one for mains and the other for car battery; plugging in the appropriate lead to the receiver makes all necessary supply connections and adjustments. It may be of interest that in the experience of both Kolster Brandes and Ultra, careful screening of all units and inter-connections of car radio usually makes it unnecessary to fit sparking-plug suppressors, though other circuits may need to be silenced. The average current consumption of a car-radio receiver is about 3½ amperes at 12 volts.

Service Gear

With the growing complexity of broadcast receivers and valves, specialised test gear is becoming essential. An impressive "Visual Valve Tester" made by Everett Edgcumbe has a double row of valve sockets, each engraved with the type of valve to be tested in it, so that there is no trouble with adaptor plugs and no confusion between different

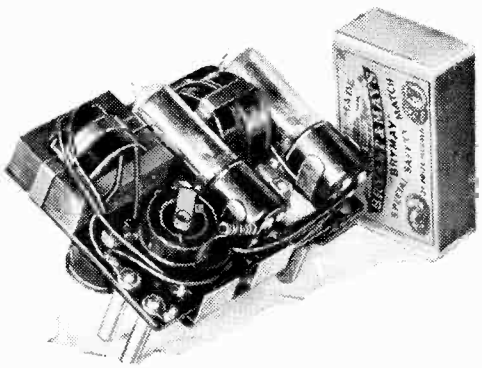

Fig. 10.—*The compactness of the Empiric Midget receiver can be judged by comparison with the match box.*

www.americanradiohistory.com

types of valve with similar bases. It contains its own power supply, with a tapped transformer for various filament voltages, and carries two large diameter meters, one to indicate various D.C. voltages and currents by switching, the other an anode-current A.C. meter directly calibrated for measurement of mutual conductance in conjunction with a 50 c/s. input of about 1 volt (from internal power supply) to the grid of the valve under test. An indication of the insulation between the electrodes of a valve can be obtained on a neon tube of the tuning indicator type which is fed with a suitable voltage through a high resistance and shunted by the leakage path to be tested; if there is appreciable leakage, the column of light in the neon is shortened, and falls to a position marked "bad" when the leakage path is 200,000 ohms. A useful general testing instrument is the Everett Edgcumbe multi-range A.C. and D.C. meter, 1 volt to 1,000 volts, 1 mA to 100 mA, and with internal battery $\frac{1}{2}$ ohm to $\frac{1}{4}$ megohm resistance measurement; it is unusual in employing a double-ended pointer, with voltage and current scales at one end and resistance scales at the other. There is also a 2-range power output meter, 500 mW. and 10 watts, with an impedance range from 2,400 to 15,000 ohms.

Short-wave Signal Generators

For radio-frequency tests, a signal-generator is the first essential, and for the I.F. and broadcast bands there is the Brown type M2 (A.C. mains) or M2U (universal mains). This employs an amplitude-controlled dynatron radio-frequency oscillator and separate triode A.F. oscillator for modulation up to a depth of 40 per cent.; the wavelength calibration is accurate to $\frac{1}{2}$ per cent., harmonic content of R.F. wave-form 3 per cent. to 5 per cent., harmonic content of audio-frequency at 40 per cent. modulation not greater than 10 per cent., and the attenuator gives a range of output from 1 microvolt to 75 millivolts. There are also short-wave models down to 5 metres (with a special oscillator circuit, which though not a normal dynatron does not require tapped coils), and the calibration accuracy is here 1 per cent. "Avo" also make a signal generator, and in addition there is a portable service oscillator, covering 100 to 260 kc/s. and 500 to 1,600 kc/s., which complete with valve and batteries is contained in a case 6in. × 4in. × 3in.; accessories for this are a dummy aerial and an attenuator pad giving constant impedance to within about 5 per cent.

A new range of Ferranti meters is the 2in. moving coil, available in round case for flush or projecting mounting (Fig. 11), or alternatively with a square flange for flush mounting; they are made as D.C., thermojunction, or rectifier types.

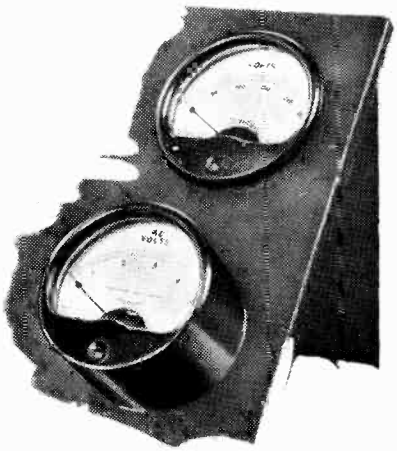

Fig. 11.—*Flush and projecting mounting Ferranti 2 in. meters*

Incidentally the Westinghouse instrument rectifiers have recently been improved, connection with the rectifying surface now being obtained through a sputtered metal layer in place of simple pressure contact; this ensures the stability which is so desirable in instrument work. Another useful Ferranti product is a small universal shunt box, to convert any 1 mA. 150 millivolt meter to 9 ranges from 5 mA. to 25 amps.

There are several improvements in resistances and fixed condensers, for example Bulgin precision 1-watt wire-wound resistances with an accuracy of $\pm 2\frac{1}{2}$ per cent., or for an extra charge ± 1 per cent. Then Dubilier metallised resistances are available to manufacturers completely insulated in bakelite, while Erie $\frac{1}{4}$-watt resistors are available enclosed in ceramic tubes (tolerances can be between ± 5 per cent. and

www.americanradiohistory.com

± 20 per cent.). The Dubilier oil-immersed condensers, which make it possible to obtain a given capacity and working voltage in a smaller space and at a lower cost than

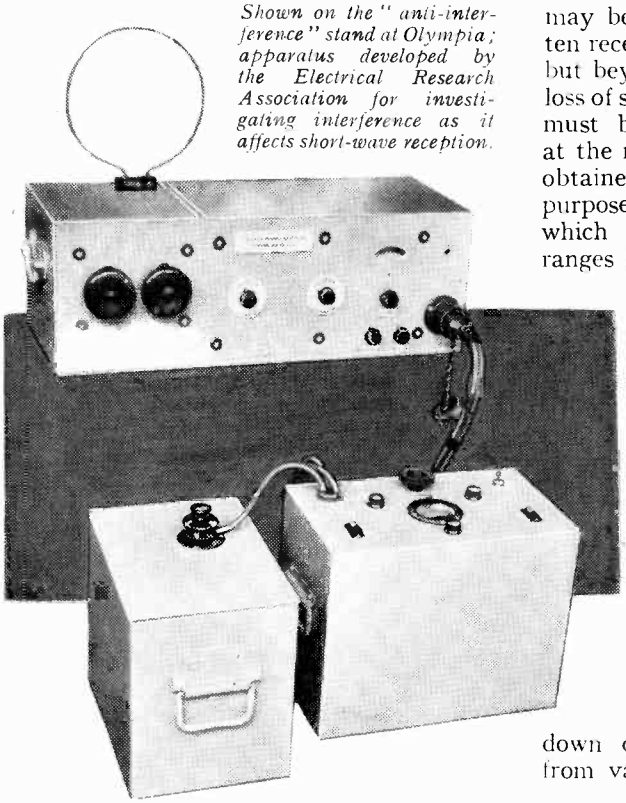

Shown on the "anti-interference" stand at Olympia; apparatus developed by the Electrical Research Association for investigating interference as it affects short-wave reception.

previous types, are now made both for higher voltages (up to 5,000 D.C.) and in smaller capacities than at first. For small capacities, up to 0.005, the moulded mica type can be supplied to special order tested up to 3,000 volts D.C.

With their wide experience of condenser manufacture, T.C.C. are naturally one of the firms specialising in units for suppression of electrical interference. Belling and Lee, too, are concerned with this problem, and particularly convenient units of theirs are the "Flex Suppressor" for fitting in the flex lead to a vacuum cleaner or other domestic appliance, and the "Line Suppressor" which can be connected in parallel with any circuit by clamping it on to the cable without breaking the wiring.

The Kolster Brandes "Rejectostat" system of remote aerial and low-impedance line to the receiver was primarily developed to combat local electrical interference; but it has found a further use in connecting a number of receivers to a single aerial, as may be required in a block of flats. Some ten receivers may be worked from one aerial, but beyond this the loading causes excessive loss of signal strength, and some amplification must be introduced to restore the signal at the receivers to the level which would be obtained direct from the aerial. For this purpose there is a "Rejectostat" amplifier, which is aperiodic over the broadcast ranges by employing five valves on medium wave and three on long-wave, each covering a section of the wave-band. Each of these amplifiers is capable of feeding 75 to 100 receivers, and ten amplifiers may be fed from one aerial, so the upper limit is about 1,000 receivers per aerial. It is assumed that such an installation will normally be run to schedule on a time-switch, and to ensure reliability the rectifying valve is duplicated; since failure of any one of the amplifying valves only introduces a certain amount of loss into a limited wave-band, complete breakdown of the installation can hardly arise from valve failure.

The Industry

RIGHTS under Dr. Robinson's present and future Stenode patents, including licensing rights for Stenode broadcast receivers, have been acquired by Marconi's Wireless Telegraph Company as the result of an arrangement concluded with the British Radiostat Corporation.

The installation of public-address equipment in the Great Hall of Winchester House has recently been carried out by Film Industries, Ltd., of 60, Paddington Street, London, W.1.

The telephone number of Claude Lyons, Ltd., 40, Buckingham Gate, London, S.W.1, has been changed to Victoria 3068/9.

A reference card giving data relating to American valves, with sketches showing base connections, is available from Henry Ford Radio, Ltd., 56, Howland Street, Tottenham Court Road, London, W.1.

www.americanradiohistory.com

The Optimum Decrement of Band-Pass Filters for the Reception of Telephony*

By D. A. Bell, B.A.

It was shown in a previous paper ("The Optimum Decrement of Tuned Circuits for the Reception of Telephony," *Wireless Engineer*, July, 1933, Vol. 10, p. 371) that a single tuned circuit employing conventional values of inductance and capacity is not satisfactory as the anode load of a screened-grid radio-frequency amplifying valve. For however much the decrement of the circuit might be reduced, the impedance to the higher *side-bands* is necessarily lower than is required for efficient amplification; the simultaneous increase of *carrier* gain merely necessitates greater tone-correction. The most obvious step is to replace the single tuned circuit by a so-called "band-pass filter" consisting of a pair of identical circuits so coupled that the resonance curve possesses a double peak. (*See* Fig. 1, where the full line curve represents the response of an actual circuit and the dotted line the response of an ideal resistance-less circuit). It is proposed now to calculate the extent to which it is profitable to reduce the decrement of the circuits comprising such a filter.

As before we shall postulate that the receiver is to have a uniform response to all audio-frequencies up to a certain maximum whose value is $\omega_m/2\pi$; under these conditions the effective amplification of any stage is the least amplification received by any frequency not exceeding $\omega_m/2\pi$. With the double-peaked resonance curve of a two-circuit filter the peak separation must be so arranged that the highest frequency to be received, which will fall on the outer slopes of the curve, receives the same amplification as the carrier, which falls on the central hollow; for the lowest frequencies to be reproduced, say 50 c/s., are very close to the carrier in comparison with the peak separation. The secondary current produced in a filter by a primary circuit e.m.f. E is given by the following fraction, whose denominator, which is the part varying with frequency, will in future be referred to as D:

$$XE/\{(R^2 + X^2 - S^2)^2 + 4R^2S^2\}^{\frac{1}{2}} = XE/D.$$

X is the value of the reactance coupling the two circuits, and $S = Lp - 1/Cp = 2\omega L$, $p/2\pi$ being the radio frequency of the e.m.f. E which is assumed to be a side-band corresponding to modulation frequency $\omega/2\pi$.

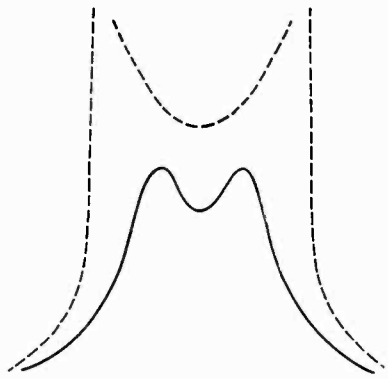

Fig. 1.

At resonance, *i.e.* when $S = 0$, $D = R^2 + X^2$, a value which it attains again when $S^2 = 2(X^2 - R^2)$, *i.e.* for a frequency differing from the carrier by $\sqrt{2}$ times the frequency difference for the peaks of the response curve. (The peaks occur when $S^2 = X^2 - R^2$). Since this result is independent of the resistance of the circuits, we may assume that the frequency difference between the carrier or central frequency and that of either peak is always to be $\omega_m/2\pi\sqrt{2}$. The necessary coupling reactance X is then determined by

$$X^2 - R^2 = 2\omega_m{}^2L^2$$

and we need only consider the amplification at the carrier frequency, when $S = 0$; for this is now one of the three places in the filter response curve where the amplification falls to the minimum value for a frequency

* MS. accepted by the Editor, January, 1935.

www.americanradiohistory.com

within the specified range of side-bands up to ω_m. The amplification will always be proportional to X/D, and for the carrier is

$$\frac{X \cdot Lp}{(R^2 + X^2)} = \frac{Lp \cdot \sqrt{2\omega_m{}^2L^2 + R^2}}{2(\omega_m{}^2L^2 + R^2)}$$

The limiting value of this expression will be attained when R^2 is negligible compared with $\omega_m{}^2L^2$, which implies a value of R exactly one-half of that required in a single circuit.

We may now examine the limiting amplification which would be obtained if R could be reduced to this extent. When a filter is used in an aerial circuit, the magnification of a band-pass filter is $Lp \cdot X/D$; neglecting R and giving X the value found above in calculating D, we find that for the carrier the magnification is

$$M = Lp \cdot \sqrt{2} \cdot \omega_m L/2\omega_m{}^2L^2 = p/\sqrt{2} \cdot \omega_m$$

This is $\sqrt{2}$ times the value for a single circuit. Analysis shows that the equivalent dynamic resistance of a filter, defined as the voltage developed across the secondary circuit when unit current flows through the primary circuit (this is clearly the quantity required in the calculation of stage gain when the filter is used as coupling between the anode of one valve and the grid of the next) is $X \cdot L^2p^2/D$. The value of this expression for the carrier frequency under conditions of negligible circuit resistance as specified above is

$$Z = L^2p^2X/X^2 = Lp^2/\sqrt{2} \cdot \omega_m.$$

This result is again $\sqrt{2}$ times greater than the corresponding value for a single tuned circuit.

Thus in the ideal case the use of a band-pass filter requires the reduction of circuit resistance to one-half the value which would suffice for a single tuned circuit, but only gives a gain in effective amplification in the ratio $\sqrt{2} : 1$. But if circuit resistances are somewhat higher than the ideal limiting values, the deviations from uniformity of response with the band-pass filter may not exceed the limits of tolerance even if no tone correction is employed. Again, it is quite likely that a receiver will contain both a single circuit and a filter in different stages; in this case the peak separation of the filter may be increased beyond the normal value, and the single circuit relied upon to compensate for the loss of low notes in the central hollow of the filter response curve. The objection to this scheme is that if the circuit resistances are low, the resultant overall response curve contains three appreciable peaks; this will involve a complicated tone-correcting circuit if perfect uniformity of output is required.

The general conclusion is that band-pass filters are a convenient alternative to tone correction if tolerable quality with good sensitivity is required; but if for any reason circuits of low decrement are to be employed, followed by tone correction, the gain hardly justifies the additional complication involved.

Noise. A Comprehensive Survey from every Point of View.

By N. W. McLachlan: pp. 148. Oxford University Press. 1935. 6s.

It is only within the past five years that the revolt against noise has become articulate in the sense that it has resulted in the appointment of State commissions of enquiry, in parliamentary and police action, and in extensive newspaper publicity. Prior to 1930 there was a considerable amount of conversational grumbling about the steadily increasing din of mechanical transport, but the prevailing feeling was that such complaints were symptoms of a neurotic tendency—a view which was as stupid as most popular conclusions are, but which effectively silenced the protesters by relegating them to an inferior class of citizens. It was even said that a hundred years ago the noise of horse-drawn carts on cobblestones was greater than that existing to-day, as if the inconvenience then felt in market places were a reason for extending the tumult by night and day far and wide over the whole country.

Dr. McLachlan's book is the first comprehensive treatise to appear on the measurement and analysis of noise. Those considerations occupy the early chapters, together with a description of the behaviour of the ear, and a careful analysis of the way in which noise levels should be measured and specified. A new term is here introduced, the *reftone*, which is the noise level referred, not to its own threshold level, but to the level of an equally loud reference tone of standard frequency. The chapters which follow divide noises into categories: noises in buildings, noises due to traffic, trains, aeroplanes, motor vehicles, machinery and electrical machines, the latter including wireless receiving sets.

The wireless amateur must not expect information from this book to enable him to eliminate the noises which interfere with reception. Such elimination is not within his powers, but lies rather in the hands of architects, designers of machinery, and transport authorities, all of whom will find this book a mine of information essential for the aspect of their professional activities concerned with the suppression of unnecessary noise.

R. T. B.

www.americanradiohistory.com

Expanding Volume Amplifiers*

By T. S. E. Thomas, B.Sc., Ph.D.

THERE can be little doubt that from the technical standpoint one of the most interesting receivers of recent production is the "High Fidelity Auto-Radiogram" of the Gramophone Company. In this set there was introduced for the first time in this country an amplifier which partially compensates one of the most serious forms of distortion associated with present-day broadcasting, namely, the artificial reduction of the intensity range of concert music. This is done by the control engineer who, by means of a volume control, reduces the amplification in crescendo passages and increases it in pianissimo passages with the result that (according to the 1934 B.B.C. Year Book) the normal intensity range of 1,000 to 1 is reduced to 30 to 1.

The reasons for this reduction in the intensity range have been discussed in a *Wireless World* article by A. L. M. Sowerby[1] and a description is there given of an amplifier circuit designed by S. Ballantine[2] which can be used to compensate this distortion. In this amplifier the amplification is controlled by the mean intensity of the input voltage and so the intensity range is expanded. This is effected by the use of variable amplification valves in which the amplification depends on the grid bias. Now it is common knowledge that amplifier valves with curved characteristics will introduce spurious harmonics when the input voltage is too large, and so it may be of interest to give some account in this article of a possible method of volume expansion which does not involve the use of variable amplification valves.

The usual method of manual volume control consists of a potentiometer contact sliding over a resistance, and if the setting of this could be made dependent on the mean intensity by some electromagnetic device a volume expanding amplifier could easily be constructed. A plausible scheme would be the use of a robust moving coil galvanometer movement with the pointer as the sliding contact of the potentiometer; the operating current—proportional to the mean intensity—being obtained from an auxiliary amplifier, in parallel with the main amplifier, in which the output valve is biased to act as an anode bend rectifier, but, unfortunately, the friction at the sliding contact would introduce a serious error unless a fairly large operating current were used.

However, if the implicit assumption of a continuous variation of amplification is abandoned, it is easy to devise a circuit using relays which will vary the amplification by discontinuous increments or steps. It is fairly certain that the discontinuous changes will not cause any appreciable distortion, provided that the magnitude of the increments is not too great, for there is a well-known law in experimental psychology—Fechner's Law—which states that the ratio of the minimum perceptible increment of a stimulus to the stimulus is usually independent of the absolute magnitude of the stimulus. In the case of a pure tone with no disturbing sounds the ratio is about 0.5 decibel (*i.e.*, 1.12) and with the more complex sounds of orchestral music the ratio is probably larger so that a small number of steps in the amplifier volume control would cover a large intensity range.

There is still to be considered the possibility that the transient electrical effects set up by the operation of the relays will produce some unwanted noises. It is easy to prove—by short-circuiting part of an anode resistance in an amplifier—that a single step will not superimpose any disturbance on broadcast music, but when an experimental volume expanding circuit using a Weston relay was tried out the disturbances set up by its operation made the music unrecognisable. This unexpected result was no doubt due to the bouncing or chattering of the relay tongue on the contacts and a test showed that in a single change over the tongue rebounded twice before coming to rest. The subject of relay chattering has been discussed by Dr. G. A. Tomlinson in an interest-

* MS. accepted by the Editor, December, 1934.

www.americanradiohistory.com

ing paper,[3] and it is there shown that the moving armature type of relay does not chatter and also has a shorter transit time than the moving coil or Weston type. It would seem therefore that the remedy for this defect in the volume expanding amplifier would be either the use of a moving armature relay or the attachment of a "make-before-break" device to the Weston relay.

The moving armature relays so extensively used in automatic telephony are definitely unsuitable because of the large difference between the operating and holding currents, and the most promising type appears to be the balanced armature relay used for high-speed telegraphy. In the Creed relay, for example, careful design has reduced the transit time to less than 1/1000 second.

It now remains to describe a circuit which by the use of relays will make the amplification dependent on the mean intensity.

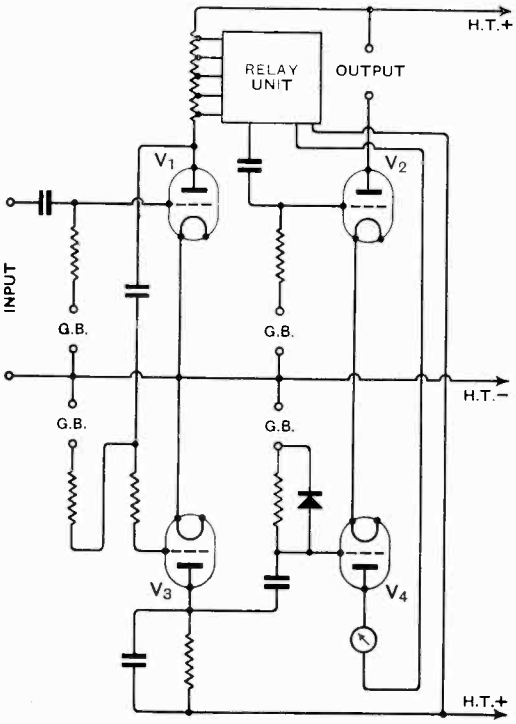

Fig. 1.—*Circuit showing principle of the amplifier.*

This circuit involves the use of the simplest type of relay with one make-before-break assembly, *i.e.*, two fixed contacts and one moving contact. It is, of course, possible to design other circuits for relays with two or more assemblies. The essential parts of the amplifier are shown in Fig. 1 and the relay unit is shown in detail in Fig. 2. V_1 and V_2 are valves in the main amplifier and V_3 and

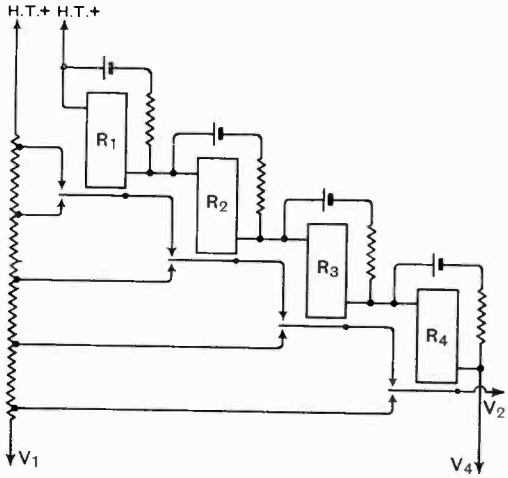

Fig. 2.—*Details of the relay circuits.*

V_4 valves in the auxiliary amplifier. The relay unit controls the amplification by changing the tapping on the anode resistance of V_1.

The amplified voltage from V_1 is applied to the grid of the input valve V_3 of the auxiliary amplifier and the amplified and rectified voltage is then applied to V_4. The rectification is effected by a half-wave Westector or a diode rectifier and the grid bias of the output valve V_4 is adjusted to make the anode current proportional to the rectified voltage. It is, of course, possible to use V_4 as an anode bend rectifier and dispense with the half-wave rectifier, but this has been included because the variable time constant CR of the rectifier gives a flexible means of smoothing the fluctuations in the rectified voltage. The anode current from V_4 is thus proportional to the mean input voltage to V_1 and is used to control the amplification through the operation of the relay unit shown in Fig. 2. In this the relays are operated on the usual bridge system. A biasing current is sent through each relay from its auxiliary battery and the relay does not change over until the anode current from V_4 is greater than the biasing current. The advantage of this arrangement

www.americanradiohistory.com

is that when the operating current has dropped below its minimum value the reverse current from the battery keeps the tongue in contact with the lower stop.

The relay contacts are connected to tappings on the anode resistance of V_1 and it is clear that by adjusting the relay biasing currents and/or the tappings on the resistance the amplification of the main amplifier can be made to vary in any desired manner with the mean intensity of the input voltage. The amplifier can be used as a volume expanding amplifier in a receiving set or it can be used as a volume contracting amplifier in a broadcast transmitter and thus act as an automatic control engineer.

The chief practical snags encountered in setting up the above circuit are :—

(*a*) Radio frequency amplification by the auxiliary amplifier.

(*b*) Interaction between the main and auxiliary amplifier circuits.

If any appreciable R.F. voltage gets through to the rectifier it produces a steady rectified voltage which swamps the variations in the audio-frequency rectified voltage and so R.F. voltages must be side-tracked by the usual methods. The evil effects of interaction between the two amplifiers are obvious and it is desirable to use a separate high tension supply for the auxiliary amplifier.

References

[1] A. L. M. Sowerby, "Expanding the Music," *Wireless World*, 24th Aug., 1934.

[2] S. Ballantine, "High Quality Radio Broadcasting," *Proc. I.R.E.*, May, 1934.

[3] G. A. Tomlinson, "Performance of Relays," *Journal of Scientific Instruments*, July, 1933.

Book Reviews

Through the Weather House

By R. A. Watson Watt. Pp. 192. Peter Davies, 30, Henrietta Street, London, W.C.2; 1935. 7s. 6d. net.

This is a fascinating description of our present knowledge of what goes on in the earth's atmosphere. The insubstantial clouds and drifts of the air are made tangible by representing the layers of the atmosphere as a series of flats which compose the weather house—a sky scraper sort of structure, and the phenomena of rain, wind and cloud, lightning and aurora, are neatly fitted into the internal arrangements of ordinary and express lifts, ventilation, heating and lighting systems, and so forth.

The ground floor, the floor on which we and our ordinary weather exist, is to us the most familiar, but it loses much of its importance when we lift our eyes and see a hundred storeys looming above with their beautiful auroral decorations from the 10th to the 100th storey. It is only recently that man has reached even to the first floor, the stratosphere, and the furnishings of the higher levels are only known from observation and deduction. It is essentially a wireless house lit and heated by wireless from the sun: it receives by day the Solar Regional programme and relays much of this as heat radiation—the Terrestrial Regional long-wave programme.

The grand staircase which leads to the first floor is carpeted with clouds of varying texture and in addition there are two lifts, one an ordinary lift which raises hot air and brings down cold air, the other an express lift which elevates the thunderous cumulus cloud. This lift shaft is a dangerous place and frequently visited by lightning and heavy storms of rain and hail.

The ledgers of the weather house disclose enormous cash transactions. On a basis of a penny per unit of electrical power the price of an hour of bright sunshine in England would be £10,000 per square mile. A year's average rainfall over Middlesex is worth £1,500,000,000, the chief cost being that of evaporating the 500 million tons of water required. Lightning, on the other hand, is cheap: a single flash costs £15, or if sold by the yard, three halfpence per yard.

The Halls of Mirrors on the upper floors are easily recognised by the reader who is interested in wireless, and the variability of these ionised layers due to solar disturbances is ascribed to gunfire from the power house in Sun Street smashing the mirrors.

This is a book of effortless artistry. The author conducts us over the weather house with the sure touch of a practised guide. As he manipulates his levers and switches to give us views of the decorative effects, the picture galleries, and the mysterious tenants of the upper floors, we feel that if science were only taught like this we would all elect to be scientists.

R. T. B.

Photo-Electric and Selenium Cells: Their Operation, Construction and Uses.

By T. J. Fielding, pp. 140 and 74 illustrations. Chapman and Hall, Ltd., 11, Henrietta Street, London, W.C.2. Price 6s.

This is an elementary book of a practical nature designed to meet the needs of experimenters in photo-electricity new to the subject. The first part of the book deals with the principles and operation of photo-electric cells, and the latter part describes many practical applications. It fills its purpose adequately and can be recommended to the beginner.

O. P.

www.americanradiohistory.com

Grid Compensated Power Amplifiers *

The Optimum Working Conditions

By W. Baggally

IN a previous article (*W.E.*, February, 1933) the writer gave the following formulae for calculating the output power and optimum load for an output stage in which the power is not limited by the necessity for avoiding grid current.

$$P = \frac{1}{2}(E_p - E_{\text{min.}})\left(\frac{D}{E_p} - I_{\text{min.}}\right) \quad .. \quad (1)$$

$$R = \frac{E_p - E_{\text{min.}}}{\frac{D}{E_p} - I_{\text{min.}}} \quad .. \quad .. \quad .. \quad (2)$$

wherein R = output load resistance, E_p = plate volts (D.C.), $E_{\text{min.}}$ and $I_{\text{min.}}$ = minimum current and voltage in anode circuit for linear operation (determined by inspection of characteristic curves), D = maximum anode dissipation of valve, P = power in R.

It is found that equation (1) has a maximum with respect to E_p. Differentiating (1) to E_p and equating to zero, we find :

$$E_{0p} = \sqrt{Dr} \quad .. \quad .. \quad (3)$$

in which

$$r = \frac{E_{\text{min.}}}{I_{\text{min.}}} \quad .. \quad .. \quad (4)$$

and E_{0p} means the optimum value of E_p.

Substituting from (3) and (4) in (2), we find

$$R_{0p} = r \quad .. \quad .. \quad (5)$$

Substitution of (3) in (1) gives

$$P_{0p} = \frac{1}{2}\left[\sqrt{D} - \frac{E_{\text{min.}}}{\sqrt{r}}\right] \quad .. \quad .. \quad (6)$$

putting

$$d = E_{\text{min.}} I_{\text{min.}} \quad .. \quad .. \quad (7)$$

and summarising we have

$$R_{0p} = \frac{E_{\text{min.}}}{I_{\text{min.}}} \quad .. \quad .. \quad .. \quad (8)$$

$$E_{0p} = \sqrt{DR_{0p}} \quad .. \quad .. \quad .. \quad (9)$$

$$P_{0p} = \frac{1}{2}\left[D^{\frac{1}{2}} - d^{\frac{1}{2}}\right]^2 \quad .. \quad .. \quad (10)$$

Three formulae which are very useful for rapidly calculating the operating conditions for a grid compensated power amplifier. It is also easy to show that

$$e_g^2 = \frac{2P_{0p}(R_a + R)^2}{\mu^2 R} \quad .. \quad .. \quad (11)$$

where e_g is the peak grid swing and R_a and μ are A.C. resistance and voltage factor respectively.

* MS. accepted by the Editor, February, 1935.

Correspondence

Letters of technical interest are always welcome. In publishing such communications the Editors do not necessarily endorse any technical or general statements which they may contain.

Frequency and Phase Distortion

To the Editor, The Wireless Engineer

SIR,—In his article, published in the July number under the above heading, Mr. Marinesco makes a plea for the use of reaction in a low-frequency amplifier, in order to compensate for frequency and phase distortion.

It is well known that by suitably applied reaction it is possible to compensate for any part of the anode circuit impedance.

In some simple cases—like that considered by Mr. Marinesco—this compensation is independent of frequency.

Unfortunately, these simple cases are not met with in practice in low frequency amplifiers.

Indeed, Mr. Marinesco establishes the condition for compensation in the case of an ideal fixed anode circuit impedance : a fixed inductance in series with a fixed resistance.

But it is well known that, in practice, this impedance varies with the frequency—i.e., the loud-speaker's impedance—and therefore, if the inductance varies, the condition of compensation is fulfilled only for a particular frequency and not for the entire musical spectrum.

For this reason, I want to point out that the compensation method described cannot be applied in practice in the manner desired by the author, in the case of low-frequency devices.

Bucarest. T. TANASESCU.

www.americanradiohistory.com

Abstracts and References

Compiled by the Radio Research Board and reproduced by arrangement with the Department of Scientific and Industrial Research.

	PAGE
Propagation of Waves	497
Atmospherics and Atmospheric Electricity	499
Properties of Circuits	500
Transmission	501
Reception	503
Aerials and Aerial Systems	507
Valves and Thermionics	507
Directional Wireless	510
Acoustics and Audio-Frequencies	510
Phototelegraphy and Television	513
Measurements and Standards	516
Subsidiary Apparatus and Materials	518
Stations, Design and Operation	521
General Physical Articles	521
Miscellaneous	522

PROPAGATION OF WAVES

2916. NOTES ON PROPAGATION AT A [MICRO-] WAVELENGTH OF SEVENTY-THREE CENTIMETRES [Rocky Point Transmissions to Aeroplane and Automobile].—B. Trevor and R. W. George. (*Proc. Inst. Rad. Eng.*, May, 1935, Vol. 23, No. 5, pp. 461–469.)

Signals were audible up to 172 miles. Between 140 and 172 miles fading was observed, quite violent at the greater distances. No selective fading was ever observed. Some indications were obtained of a sunset and sunrise effect. Even at 8000 feet below the line of sight (distance 113 miles) no shift of polarisation was found either with horizontally or vertically polarised waves; at this distance the horizontally polarised waves gave much the stronger signals. Unknown factors (rain ?) stopped all signals for 24 hours. Field intensities well below the line of sight were considerably stronger at night than during the day. "Inspection of Fig. 1 shows the rapid attenuation experienced with distance beyond 80 miles at which the airplane was below the line of sight. This attenuation occurs nearly as the inverse ninth power of the distance." Fig. 2 represents data at 73 miles at various altitudes: "at this distance, the airplane was able to go above the line of sight and it may be observed that the rate of increase of field intensity is dropping off in this zone." Rocky Point was then using a horizontally polarised V aerial having a power gain of 100 over a half-wave doublet.

2917. ULTRA-SHORT-WAVE PROPAGATION OVER LAND [17 to 200 Mc/s: Comparison of Formulae and Field-Strength Measurements: the "Seven-Halves Power" Relation: Fading: Discrepancies between Theory and Experiment, for 100–200 Mc/s, suggest Omission of Some Factor becoming important at These Frequencies].—Burrows, Decino and Hunt. (*Proc. Inst. Rad. Eng.*, June, 1935, Vol. 23, No. 6, pp. 558–559: summary only.) For previous work *see* 2918.

2918. ULTRA-SHORT WAVES IN URBAN TERRITORY [Discussion and Authors' Closure: Aerial Height as measured from Roof or from Ground: etc.].—Burrows, Hunt and Decino: Muyskens and Kraus. (*Elec. Engineering*, July, 1935, Vol. 54, No. 7, p. 749.) *See* 2153 of July. The omission of a factor 4 from equations 3a and b is also corrected.

2919. AMATEUR 5-METRE TRANSMISSIONS [including Transmissions from "Daily Telegraph" Building].—(*Television*, July, 1935, Vol. 8, No. 89, pp. 421 and 423.)

2920. TEMPERATURE CHANGES IN THE HIGHER ATMOSPHERE.—E. V. Appleton. (*Nature*, 13th July, 1935, Vol. 136, pp. 52–53.)

The observed diurnal and seasonal variations of upper atmospheric ionisation have been compared with those expected according to a simple theory of photo-ionisation by solar radiation. It is found that, for E region, there is little change of air density or temperature throughout the year. For F region, the assumption that the atmospheric distribution of molecular density with height is constant throughout the year must be abandoned. The abnormally low value of summer noon ionisation density must be the result of reduced summer air density, *i.e.* of increased temperature (1200° K at 300 km height). Apparent increase in nocturnal ionisation in winter is really concentration of electrons due to upper atmospheric shrinkage. In midsummer the sun never sets in F region and the ionisation generally decays steadily. The theory also explains the alteration of structure (stratification) in F region on a summer day.

2921. IONOSPHERIC DISPERSION THEORY.—G. Goubau. (*Hochfztech. u. Elekzakus.*, June, 1935, Vol. 45, No. 6, pp. 179–185.)

For previous work by the writer *see* 1934 Abstracts, pp. 549–551, and 357 of February, 1935. The present paper discusses the influence of collisional friction on the dispersion curves for magneto-ionic propagation, in the case when the dispersion formula does *not* include the Lorentz polarisation term (for a discussion including this term, *see* M. Taylor, 1934 Abstracts, p. 373). Dispersion curves of the index of refraction as a function of the electron density, for a definite inclination of the direction of propagation to the magnetic field, are drawn for three wavelengths ($\lambda = 80$, 225 and 490 m: Figs, 1, 2 and 3 resp.), representing the three types of curve obtainable, and four values of the collision frequency ν (0, $\frac{1}{2}\nu_0$, ν_0 and $2\nu_0$, where ν_0 is the critical collision frequency). The possibility of reflection or total reflection of waves of all lengths is discussed for the various collision frequencies for both the ordinary and extraordinary waves. For long waves, the extraordinary wave is found not to be reflected when $\nu > \nu_0$. Numerical

www.americanradiohistory.com

estimates of the influence of collisional friction on the absorption of the waves are made in § III. Observations have shown that, for virtual reflection heights below 100 km, there are measurable differences in the heights for different wavelengths, and this leads to the conclusion *either* that $\nu < \nu_0$ at heights of 90 to 100 km, which does not agree with other geophysical estimates, *or* that the dispersion at these heights is not due only to electrons, but also to ions which are present in considerable numbers. A further paper dealing with the question of the influence of ions on propagation in E region is promised.

2922. THE REFRACTIVE INDEX OF GASEOUS MIXTURES [for Optical Wavelengths: Measurements show Refractive Index depends linearly on Proportions of Mixture].—H. Bittel. (*Ann. der Physik*, Series 5, No. 1, Vol. 23, 1935, pp. 61–89.)

2923. STATIONARY OPTICAL PATHS [Relationship between Fermat's Principle and That of Least Action].—D. S. Kothari. (*Nature*, 6th July, 1935, Vol. 136, p. 33.) *See* Smith, 1934 Abstracts, p. 432.

2924. ON THE VELOCITY OF PROPAGATION OF SHORT RADIOELECTRIC WAVES.—N. Stoyko and R. Jouaust. (*Comptes Rendus*, 24th June, 1935, Vol. 200, No. 26, pp. 2149–2150.)

The velocities are deduced from numerous time-signal observations of the difference in times of arrival of the "direct" signal and the "superpropagation" signals (longer-arc and round-the-earth signals). The average velocity (wavelengths ranging from 16.35 m to 31.25 m) was 287 000 km/s. The waves between 16 and 18.50 m ("day waves") gave 286 700 ± 200 km/s, while those between 25 and 31 m gave 287 400 ± 400 km/s, the difference being due to the higher reflection point for the shorter waves. For the "day wave" band superpropagation was only found when the night path was in a summer hemisphere, whereas for the waves around 30 m this path might lie in a winter hemisphere.

The table of velocities for direct day propagation and day and night superpropagation shows a day superpropagation velocity systematically higher than the night superpropagation velocity—explained by the lower reflecting heights in the illuminated regions. The velocity for the direct day propagation is systematically less than that for day superpropagation: this may be accounted for by the fact that the waves giving the direct signal leave the transmitter at a greater angle to the horizon than those giving rise to superpropagation.

2925. THE PROPAGATION OF SHORT RADIOELECTRIC WAVES IN THE REGION OF POLAR AURORAS [Any Velocity Change?].—N. Stoyko and R. Jouaust. (*Comptes Rendus*, 8th July, 1935, Vol. 201, No. 2, pp. 133–134.)

Honolulu time signals, passing to Paris by way of the N magnetic pole, show an unchanged velocity for the 8 a.m. reception in Paris. There is a systematic delay of 0.0518 sec. on the 5 p.m. signals, but this is probably due to these signals having come by the longer arc: on this hypothesis the velocity is seen to agree with that found by other methods for such "superpropagation" (*see* 2924).

2926. SOME DATA CONCERNING THE COVERAGE OF THE FIVE MEGACYCLE STANDARD FREQUENCY TRANSMISSION.—E. L. Hall. (*Proc. Inst. Rad. Eng.*, May, 1935, Vol. 23, No. 5, pp. 448–453.) Within about 300 miles of the 1 kw station the strongest signal was by day: the greater part of the country received the best signal by night. No clear evidence of a skipped area was found.

2927. RESEARCHES ON PROPAGATION OF WAVES IN AUSTRALIA.—(*Australian Radio Research Board*, Reports Nos. 6 and 7, 1935.)

The papers in these two Reports have been dealt with in past Abstracts. They are (Report No. 6) "On the Rotation of the Plane of Polarisation of Long Radio Waves," by Green & Builder (Abstracts, 1934, p. 431); "A Field-Intensity Set," by Green & Wood (1933, p. 574); "Measurements of Attenuation, Fading and Interference in S.E. Australia, at 200 kc/s," by Munro & Green (1933, p. 559); "A Frequency Recorder," by Martyn & Wood (655 of March); and (Report No. 7) "The Propagation of Medium Radio Waves in the Ionosphere," by Martyn (1727 of June); "The Characteristics of Downcoming Radio Waves," by Martyn & Green (1312 of May); "The Influence of Electric Waves on the Ionosphere," by Bailey & Martyn (1934, p. 606); and "Long Distance Observations of Radio Waves of Medium Frequencies," by Martyn, Cherry & Green (1728 of June).

2928. THE RÔLE OF THE EARTH'S ATMOSPHERE IN RADIO COMMUNICATION [Survey].—K. Sreenivasan. (*Electrotechnics*, Bangalore, April, 1935, No. 8, pp. 21–34.)

2929. RADIO PROPAGATION OVER SPHERICAL EARTH [and the Merging of Watson's Solution into the Abraham Solution: Effects of Refraction by Lower Atmosphere, and of Imperfect Conductivity of Earth: Doubts on Eckersley's Extension of Watson's Solution].—C. R. Burrows. (*Proc. Inst. Rad. Eng.*, May, 1935, Vol. 23, No. 5, pp. 470–480.)

2930. INTERACTION BETWEEN RADIO TRANSMITTING STATIONS [by Propagation along Earth Surface, Water Pipes, etc.].—Lvovich. (*See* 2986.)

2931. THE ECLIPSE OF AUGUST, 1932, OBSERVED BY RADIO FACSIMILE [Marked Effect of Corpuscular Shadow].—E. F. W. Alexanderson. (*Proc. Inst. Rad. Eng.*, May, 1935, Vol. 23, No. 5, pp. 454–460.) *See* also 1933 Abstracts, p. 91.

2932. COMPARISON OF COSMIC DATA WITH CHARACTERISTICS OF THE IONOSPHERE AT WASHINGTON.—E. B. Judson. (*Proc. Inst. Rad. Eng.*, June, 1935, Vol. 23, No. 6, p. 560: summary only.)

www.americanradiohistory.com

2933. EXCITATION OF THE VEGARD-KAPLAN BANDS BY ELECTRONIC BOMBARDMENT OF A MIXTURE OF ARGON AND NITROGEN.—R. Bernard. (*Comptes Rendus*, 17th June, 1935, Vol. 200, No. 25, pp. 2074–2076.) For other recent work *see* 2563/2565 of August.

2934. ON THE NATURE OF UNPOLARISED LIGHT.—R. T. Birge. (*Journ. Opt. Soc. Am.*, June, 1935, Vol. 25, No. 6, pp. 179–182.) Examination of the conclusions of Langsdorf and Du Bridge (1934 Abstracts, p. 201). The latter reply on pp. 182–183.

ATMOSPHERICS AND ATMOSPHERIC ELECTRICITY

2935. SIMULTANEOUS OBSERVATIONS OF ATMOSPHERICS WITH CATHODE-RAY DIRECTION FINDERS AT TOOWOOMBA AND CANBERRA [570-Mile Base Line].—G. H. Munro, H. C. Webster and A. J. Higgs. (*Australian Radio Research Board*, Report No. 8, 1935, pp. 9–42.

Errors (due—at short distances—to lightning flashes being non-vertical and elevated some distance above earth; and—at greater distances—to the indirect ray): intensities of individual atmospherics: mean intensities of sources observed at Toowoomba (iso-intensity lines and the variations in terrain): comparative constancy of the mean radiating power of a lightning flash in a particular wave-band: night observations (increased intensities, nearly constant between 1 500 and 4 000 km: indirect ray at least 5 times as intense at night as in daytime, its night intensity being roughly equal to that of direct ray at 1 000 km): distribution of sources located by simultaneous observations: discussion of theories of thunderstorm formation: correlation with thunderstorm reports (large percentage of sources observed appear to be groups of thunderstorms of "frontal" type, as contrasted with "heat" type): etc.

2936. ATMOSPHERIC INTERFERENCE WITH RECEPTION.—W. J. Wark. (*Australian Radio Research Board*, Report No. 8, 1935, pp. 43–61.)

Previous "numerical measures" of degree of interference by atmospherics with broadcast signals—wide divergences between values laid down as satisfactory: origin and nature of atmospherics: variation of radiated power with band-width and wavelength (substantial correctness of relation "equivalent power proportional to wavelength squared"): intensity as function of distance, wavelength, and ground conductivity (and the magnitude of error in assuming propagation from a height of 300 m): thunderstorms (frequency; seasonal and diurnal distribution; activity; size; rate of movement): the ratio "atmospheric peak intensity causing broadcast interference" to "broadcast signal intensity" (indications that 2 : 1 ratio involves interference; desirability of further investigations of this ratio): calculation of hours and degree of interference (including relation to thunderstorm incidence in the locality): etc.

2937. A NOTE ON THE SOURCE OF INTERSTELLAR INTERFERENCE ["Static Hiss" due to Thermal Agitation of Charged Particles ?].—K. G. Jansky. (*Proc. Inst. Rad. Eng.*, June, 1935, Vol. 23, No. 6, pp. 559–560: summary only.) *See* 1934 Abstracts, p. 31.

2938. MULTIPLE LIGHTNING STROKES [Discussion].—McEachron. (*Elec. Engineering*, July, 1935, Vol. 54, No. 7, p. 782.) *See* 670 of March.

2939. PARIS H.T. CONFERENCE [including Localisation of Lightning Strokes: Conductibility of Air: etc.].—(*Electrician*, 12th July, 1935, Vol. 115, No. 2980, pp. 39–40: to be continued.)

2940. NOTES ON A CASE OF DAMAGE BY LIGHTNING [Steel Strands of 13 Feet of Hawser completely Eliminated without Damage to Hemp Core].—W. H. Myers. (*Journ. Inst. Eng. Australia*, May, 1935, Vol. 7, No. 5, pp. 186–187.)

2941. THE RÔLE OF SURFACE INSTABILITY IN ELECTRICAL DISCHARGES FROM DROPS OF ALCOHOL AND WATER IN AIR AT ATMOSPHERIC PRESSURE [Experiments show Charged Droplets have Large Mobilities and may be Sole Carriers of Discharge Current].—J. Zeleny. (*Journ. Franklin Inst.*, June, 1935, Vol. 219, No. 6, pp. 659–675.)

2942. STUDY OF THE EARTH'S ELECTRIC FIELD, ATMOSPHERIC IONISATION AND VERTICAL CURRENT AT SCORESBY SOUND DURING THE POLAR YEAR.—A. Dauvillier. (*Comptes Rendus*, 24th June, 1935, Vol. 200, No. 26, pp. 2209–2211.)

"Previous polar expeditions had given somewhat contradictory results which, however, seemed to establish the existence in these regions of a stronger ionisation and a larger vertical current than in our own latitudes." The present results include the following:—(a) The electric field, influenced by wind, nebulosity and precipitation but not by polar aurora, averages 71 v/m at sea level and is thus comparable with that at heights of 2 to 3 km in our latitudes. "The disappearance of the diurnal variation, at the beginning of the polar day, is a new notable fact." (b) The normal conductivity at Scoresby Sound is *lower* than the average found over oceans and is comparable with the values measured over continents. It is exclusively due to the cosmic radiation. "The high conductivities previously found in polar regions in summer are due to the radioactivity of the soil (volcanic rocks)." (c) The average vertical current is much lower than that observed over oceans, so that the existence of a large vertical current in the polar regions is not confirmed. Its diurnal variation, like that of the conductivity, disappears in April/May. The terrestrial electric field is due to this current, and the low field value at Scoresby Sound is explained, not by a greater atmospheric conductivity, but by the smaller vertical current in the polar regions.

2943. "SUBSIDENCE WITHIN THE ATMOSPHERE" [Book Review].—J. Namias. (*Science*, 31st May, 1935, Vol. 81, No. 2109, pp. 539–540.)

www.americanradiohistory.com

2944. SYSTEMATIC INCLINATION TOWARDS WEST OF THE SOLAR PROTUBERANCES.—M. Roumens. (*Comptes Rendus*, 8th July, 1935, Vol. 201, No. 2, pp. 127–128.)

2945. RADIO-TRANSMISSION OF COSMIC-RAY DATA FROM THE STRATOSPHERE [Coincidences recorded by Relay switching on Oscillator: Signals counted at Earth's Surface].—S. Vernoff. (*Nature*, 29th June, 1935, Vol. 135, pp. 1072–1073.)

2946. COSMIC-RAY RESULTS OF THE AMERICAN STRATOSPHERE BALLOON *Explorer I* [Arrangement of Counters: Curve of Spatial Distribution of Rays at 40 000 Ft].—(*Nature*, 29th June, 1935, Vol. 135, pp. 1083–1084.)

2947. AN APPARENT EFFECT OF GALACTIC ROTATION ON THE INTENSITY OF COSMIC RAYS [Theory gives Sidereal Time Variation agreeing with Observations: Tests suggested will show whether Cosmic Rays originate outside Our Galaxy].—A. H. Compton and I. A. Getting. (*Phys. Review*, 1st June, 1935, Series 2, Vol. 47, No. 11, pp. 817–821.)

2948. IONISATION MEASUREMENTS *re* THE CONNECTION BETWEEN COSMIC RADIATION AND NOVA HERCULIS [Slight Increase during Culmination Period].—W. Messerschmidt. (*Zeitschr. f. Physik*, No. 1/2, Vol. 95, 1935, pp. 42–45.)

2949. NOVA HERCULIS AND COSMIC RAYS [Measurements show Ray Intensity greater when Nova at Highest Altitude].—A. K. Das. (*Nature*, 6th July, 1935, Vol. 136, pp. 29–30.)

2950. AN ATTEMPT TO ANALYSE COSMIC RAYS [Primary Rays are Electrically Charged Particles: Three Range Groups identified as Alpha-Particles, Electrons and Protons].—A. H. Compton. (*Proc. Phys. Soc.*, 1st July, 1935, Vol. 47, Part 4, No. 261, pp. 747–773.)

2951. RESEARCHES ON THE FREQUENCY OF SECONDARY PHENOMENA OF THE PENETRATING RADIATION IN LEAD [Fresh Support to Rossi's Hypothesis].—A. Drigo. (*La Ricerca Scient.*, 15/30 June, 1935, 6th Year, Vol. 1, No. 11/12, pp. 529–534.)

2952. THE ABSORPTION OF COSMIC-RAY ELECTRONS [Specific Energy Loss Values in Lead].—J. C. Street, R. H. Woodward and E. C. Stevenson. (*Phys. Review*, 15th June, 1935, Series 2, Vol. 47, No. 12, pp. 891–895.)

2953. COSMIC RAY BURSTS IN [Ionisation Chambers filled with] LIQUID DIELECTRICS.—C. Bialobrzeski and I. Adamczewski. (*Nature*, 20th July, 1935, Vol. 136, p. 109.)

PROPERTIES OF CIRCUITS

2954. OSCILLATING CIRCUITS WITH SLOWLY PULSATING ATTENUATION (THEORY OF THE SUPER-REGENERATIVE RECEIVER).—A. Erdélyi. (*Ann. der Physik*, Series 5, No. 1, Vol. 23, 1935, pp. 21–43.)

Weak signals only are considered, so that, in the differential equation governing the action of the super-regenerative receiver, the resistance may be regarded as independent of the current, though subject to periodic variations. The auxiliary frequency is assumed to be small compared with the carrier frequency. The differential equation for the free oscillations is reduced to the self-adjoint form (eqn. 7) and the free oscillations are discussed, the regions of stability and instability being deduced (for similar work by the writer *see* Abstracts, 1934, p. 436), with the occurrence of self-excitation and "pulling into tune." The mathematics of the forced oscillations are then worked out, using the method of variation of parameters. A sinusoidal carrier wave leads to formulae (13) and (14) for the current; only in the case of self-excitation of the free oscillation will it predominate over the forced oscillations, in other cases the forced oscillation is the stronger. If the impressed external e.m.f. is a modulated wave, it can be expressed as a Fourier series, to each component of which the theory of the sinsusoidal oscillation applies. The components are in general amplified by different amounts, so that the signal is distorted. The strength of the current in the forced oscillation is then deduced, with the help of the Volterra integral equation which corresponds to the differential equation and the appropriate Neumann series. Approximate general expressions for the current are given in eqns. 17 and 19. The current produced by a harmonically modulated carrier wave is calculated (result eqn. 23, while eqn. 24 gives the current when the resistance varies sinusoidally; eqns. 23b and c give time averages of the complex current amplitude).

Resonance curves are next considered for the unmodulated wave: resonance occurs whenever the difference of frequency between that of signal and the natural frequency of the receiving circuit is an integral multiple of the auxiliary frequency ("multiple resonance"). Assumption of sinusoidal variation of resistance gives resonance curves (see Fig. 1) confirming the experimental results of Gorelik and Hintz (1932, p. 164). The effect of attenuation is shown in that the amplitude maxima do not occur exactly at the integral multiples of the auxiliary frequency. The amplification of the carrier wave is compared with that in an ordinary receiver; Fig. 2 shows it as a function of the auxiliary voltage, giving satisfactory agreement with Kohn's experimental curves (1931, p. 267). Figs. 3 and 4 give further curves of amplification; as the auxiliary frequency falls, the amplification increases slowly at first and then more quickly, so that it is advisable to use as low an auxiliary frequency as possible (agreeing with Armstrong, *Proc. Inst. Rad. Eng.*, Vol. 10, 1922, pp. 244–260). For a modulated signal with the receiver tuned to it, eqn. 27 gives the real current amplitude.

2955. THE GRAPHICAL SOLUTION OF SIMPLE PARALLEL-TUNED CIRCUITS [using Conformal Representation].—G. Builder. (*Journ. Inst. Eng. Australia*, November, 1934, Vol. 6, No. 11, pp. 445–446.) The first method suggested is applicable when a rigorous solution is required, while the second method gives "a very close approximation in many cases met with in wireless design."

www.americanradiohistory.com

2956. NOTE ON THE "BENDING" PROPERTIES OF SYMMETRICAL ELECTRICAL NETWORKS.—E. Selach. (*Phil. Mag.*, July, 1935, Series 7, Vol. 20, No. 131, pp. 192–203.)

An analysis of general properties of symmetrical networks (schemes Figs. 1–4, considered by Cauer —*see* Abstracts, 1929, p. 630; 1932, pp. 458 and 537—and by Nyquist and Brand, 1931, p. 44). Simple "bending" formulae are derived for the impedances of the networks, and cases where the ideal transformer shown in the schemes can be omitted are discussed. Relations between the impedances are given and the constants of symmetrical networks determined from the "bending" formulae. The use of the formulae in the construction of equivalent networks and the analysis of electrical filters is also considered: a simple method is shown of determining the position of transmitted and attenuated bands. For previous work by the writer *see* 1931 Abstracts, p. 553.

2957. PERFORMANCE DIAGRAMS FOR NON-DISSIPATIVE SYMMETRICAL LATTICE-TYPE NETWORKS.—Z. Kayamachi. (*Jap. Journ. of Eng. Abstracts*, Vol. 13, 1935, pp. 40–41.)

2958. THE SUPERPOSITION OF TWO SIMPLE-HARMONIC WAVES.—Y. W. Lee, Y. H. Ku and F. Hsu. (*Sci. Rep. of Nat. Tsing Hua Univ.*, Series A, April, 1935, Vol. 3, No. 1, pp. 65–75 and Plate: in English.)

From the authors' summary:—"The modulating function, commonly known in engineering as the 'envelope,' of the sum of two simple-harmonic waves is developed into a Fourier cosine series with coefficients in terms of the complete elliptic integrals of the first and second kinds. Since tables of these integrals are available, this new expansion lends itself to numerical computation much more readily than other known series expansions [*e.g.* that of Terman] in all of which each coefficient is an infinite series. . . ."

2959. "REVERSIBLE INSTABILITY" IN A SCREEN-GRID VALVE CIRCUIT, AND ITS USE IN AN ELECTRONIC RELAY OR AMPLIFIER.—Pistoia. (*See* 3228.)

2960. THE A.C. RESISTANCE OF PARALLEL CONDUCTORS OF CIRCULAR CROSS-SECTION.—A. H. M. Arnold. (*Journ. I.E.E.*, July, 1935, Vol. 77, No. 463, pp. 49–58.)

After briefly discussing various previous formulae, the writer says: "Snow's and Strutt's formulae have the virtue of extreme simplicity but are liable to be seriously in error. . . . Thus Butterworth's formula is the only one having a reasonable range of validity. The present author has, therefore, investigated it in great detail and has developed an improved formula [equation 9] having a greater range of validity."

2961. TRANSPORT OF ENERGY ALONG CABLES TO A DISTANCE [50 km or more: Calculations from Diagrams of Real Quantities derived from Fundamental Equations].—H. Kropp. (*Arch. f. Elektrot.*, 11th June, 1935, Vol. 29, No. 6, pp. 431–442.)

TRANSMISSION

2962. THE INCLINED-FIELD MAGNETRON AS GENERATOR OF MICRO-WAVES.—N. Carrara. (*Alta Frequenza*, June, 1935, Vol. 4, No. 3, pp. 314–328.)

Following on his work (1879 of June) on the shape of the electron trajectories in a magnetron when α (the angle between field and filament) is not zero, the writer now examines the advantages to be obtained (in output power) by a suitable choice of this angle. His analysis leads to two formulae (p. 325) for the optimum value of α: the second of these brings in the binomial $1 + \eta$ which corrects for the trajectory deformation arising from the superposed a.c. potentials and showing itself as an apparent alteration in the ratio m/e. To check his theoretical results, the writer shows, in Table I, the data of the two magnetrons used by de Fassi and Salom (93 of January) and works out, by these two formulae, the optimum values of α for these two generators. In Tables II and III the experimentally found angle is represented by α_m, while α_{1m} and α_{2m} are the angles calculated by the first and second formulae respectively: it is seen that the values given by the "corrected" formula agree quite well with the measured values. The values denoted by α'_{2m} in Table I are from the "corrected" formula but use a correcting binomial slightly greater than that given, for this "No. 3" magnetron, in Table I (1.35 instead of 1.29): the results are still nearer to the measured values.

2963. GRATING THEORY AND STUDY OF THE MAGNETOSTATIC OSCILLATOR FREQUENCY [Measurement of Length of Micro-Waves].—C. E. Cleeton. (*Physics*, June, 1935, Vol. 6, No. 6, pp. 207–209.)

The writer has previously described echelette gratings for measurement of wavelengths between 1 and 4 cm (*see* Cleeton & Williams, 1934 Abstracts, pp. 33, 260 and 284). The special type here described measures wavelengths from 1 to 10 cm by means of "an automatically changing groove form which keeps the direction of the centre of the diffraction pattern fixed." The theory of the grating is given, with a formula for the distribution of diffracted energy which is found to agree with experimental values. The magnetostatic oscillator is discussed: it produces "a band of frequencies unless it is adjusted for the condition at which the tube gives the maximum output": in this case the spectrometer resolution was too low for conclusions to be drawn.

2964. MAGNETRON OSCILLATORS FOR GENERATING FREQUENCIES FROM 300 TO 600 MEGACYCLES [50 to 100 Watts Output].—G. R. Kilgore. (*Proc. Inst. Rad. Eng.*, June, 1935, Vol. 23, No. 6, p. 560: summary only.)

2965. POWERFUL GENERATION OF ULTRA-SHORT [Micro-] WAVES BY MEANS OF ELECTRONIC OSCILLATION.—S. Uda and S. Nakamura: Kozanowski. (*Jap. Journ. of Eng. Abstracts*, Vol. 13, 1935, p. 49.) Using Kozanowski's circuit (1932 Abstracts, p. 581) with a push-pull connection of Radiotron UX 852 valves and plate and filament Lecher systems, an oscillating current of 1 700 mA at 80 cm was obtained. Certain disagreements with Kozanowski's results were found.

www.americanradiohistory.com

2966. A FIVE-METRE TRANSCEIVER [with Nominal Range of 20 Miles].—(*Television*, July, 1935, Vol. 8, No. 89, pp. 398–399.)

2967. THE TIME OF FLIGHT OF ELECTRONS IN A CYLINDRICAL DIODE: CASE WHEN CURRENT IS LIMITED BY SPACE CHARGE.—C. L. Fortescue. (*Wireless Engineer*, June, 1935, Vol. 12, No. 141, pp. 310–311.)

Combination of the method proposed by Benham (1931 Abstracts, p. 212) with Langmuir's 1923 solution, to give an easy calculation of the flight time.

2968. FREQUENCY CONTROL BY LOW POWER FACTOR LINE CIRCUITS [Laws governing Design and Performance, for High and Ultra-High Frequencies, 13–500 Mc/s: Temperature Coefficient of Frequency and the Reduction of Its Effect: etc.].—Hansell, Kroger and Carter. (*Proc. Inst. Rad. Eng.*, June, 1935, Vol. 23, No. 6, p. 559: summary only.)

2969. ON THE NEUTRALISATION OF INTER-ELECTRODE COUPLING IN RADIO TRANSMITTERS [particularly for Very Short Waves].—S. A. Zusmanovsky. (*Izvestia Elektroprom. Slab. Toka*, No. 1, 1935, pp. 8–18.)

The following methods of neutralising the anode/grid capacity in h.f. amplifiers are examined in detail with special regard to their suitability for transmitters operating on very short waves (below 15 m):—1. The use of neutralising condensers connected between the grid and anode circuits. 2. The use of a parallel resonance circuit tuned to the operating frequency and connected as in (1), the capacitive branch of the circuit being the anode/grid capacity. It is pointed out that methods (1) and (2) are not very suitable for use on very short waves. 3. The circuit proposed by Prof. Bontch-Bruevich in which the grid is earthed, so that the grid circuit forms part of the anode-earth circuit and the output voltage of the valve equals the sum of the anode/filament and filament/grid voltages. The circuit is very suitable for use on wavelengths of the order of 15 m and, with certain precautions in the construction of the valves, should give good results on shorter wavelengths.

4. The use of screen-grid valves. A mathematical investigation of the operation of a screen-grid valve is given and the following two conditions are examined separately: (a) direct capacity feed from the grid circuit to the anode circuit, and (b) back feed from the energised anode circuit to the grid circuit. It is shown that screen-grid valves are not suitable for operation under 15 to 20 metres. 5. The use of a special screen-grid valve developed by the author. An additional anode is employed in this valve, having the same capacity to the screen and grid as the active anode and so mounted as to be outside the electron stream. A tuned circuit is connected between the two anodes so that it is virtually a cross arm of a bridge formed by the capacities between the anodes and the screen, and no currents can be induced in it owing to direct feed. The back feed is also very much decreased, and in addition the currents induced in the grid circuit are out of phase by 90°. It is shown for instance that in a particular type of valve with two anodes the back feed is only 2.5% of that in an ordinary screen-grid valve.

2970. AN EARTHED-GRID CIRCUIT FOR ULTRA-SHORT WAVES.—Bontch-Bruevich. (*See* Zusmanovsky, 2969.)

2971. FREQUENCY MODULATION [Theoretical Outline and Discussion of Armstrong's Tests on Ultra-Short Waves].—Armstrong. (*Rad. Engineering*, May, 1935, Vol. 15, No. 5, pp. 22–23.)

2972. FREQUENCY MODULATION ADVANCES: SYSTEM ON ULTRA-HIGH FREQUENCIES, DEVELOPED BY E. H. ARMSTRONG, DISCRIMINATES AGAINST NOISE AND INCREASES [7 m-Wave] RANGE TO 100 MILES.—Armstrong. (*Electronics*, June, 1935, pp. 188–189.) See also *ibid.*, May, p. 162. "The wider the band-width received, the lower the noise level in relation to the signal received. . . . The explanation of this seeming direct contradiction of the theory is not yet forthcoming . . ."

2973. SERIES MODULATION [Limitations of Other Systems: Theoretical and Experimental Investigation: Advantages and Limitations: the Need for an Improved Valve for Series Modulator].—C. A. Culver. (*Proc. Inst. Rad. Eng.*, May, 1935, Vol. 23, No. 5, pp. 481–495.)

2974. RADIO TRANSMISSION WITH A CONSTANT MODULATION RATIO.—J. I. Effrussi. (*Izvestia Elektroprom. Slab. Toka*, No. 5, 1935, pp. 1–17.)

Author's summary:—"An idea of the method of transmission with a constant modulation ratio, and a preliminary calculation of the economy obtained at the transmitting station, are given. The régime of modern receivers, with this method of transmission, is discussed. Fundamental theoretical relations for the here-described method of accomplishing transmission with constant modulation ratio—the so-called 'compensation method'—is given, together with a sample calculation of the modulated and power stages of the transmitter. Special attention is paid to the analysis of possible distortions of sound—its building-up and dying-out—as well as with stationary sound. The fundamental data for the calculation of the transmitter and the analysis of distortions are proved experimentally by the investigations carried out in the C.R.L." The paper is to be concluded in the next issue.

2975. ASYMMETRIC SIDE-BAND BROADCAST TRANSMISSION.—P. P. Eckersley. (*Wireless Engineer*, June, 1935, Vol. 12, No. 141, pp. 321–323.) Summary of I.E.E. paper: *see* also 2870 of August, and Lamb, 3249, these Abstracts.

www.americanradiohistory.com

2976. GRAPHICAL HARMONIC ANALYSIS FOR DETERMINING MODULATION DISTORTION IN AMPLIFIER TUBES.—W. R. Ferris. (*Proc. Inst. Rad. Eng.*, May, 1935, Vol. 23, No. 5, pp. 510–516.) "The method . . . may be used with the static characteristic to obtain any of the components of the output of a thermionic or other system when excited with a modulated alternating voltage of the form $e_g = E \sin \omega t\ (1 + m \sin pt)$." The process is a two-stage one.

2977. A SIMPLE MODULATION METER [Diode Instrument giving Direct Reading of Percentage Modulation for a Range of Sinusoidal Modulation Frequencies].—J. B. L. Foot. (*Journ. Scient. Instr.*, July, 1935, Vol. 12, No. 7, pp. 216–217.)

2978. AN ANALYSIS OF CLASS C AMPLIFICATION.—M. Reed. (*Wireless Engineer*, June, 1935, Vol. 12, No. 141, pp. 296–302.) Design data obtained from the equations here derived agree satisfactorily with the measured results given by Fay (1932 Abstracts, p. 343).

2979. AN ANALYSIS OF CLASS B AND CLASS C AMPLIFIERS [allowing for Non-Linearity of Valve Characteristics and Discontinuity of Plate-Current Flow: Experimental Confirmation of Equations, on 500-Watt Valve].—B. F. Miller. (*Proc. Inst. Rad. Eng.*, May, 1935, Vol. 23, No. 5, pp. 496–509.)

2980. RECENT DEVELOPMENTS OF CLASS B AUDIO- AND RADIO-FREQUENCY AMPLIFIERS [and the Reduction of Distortion].—L. E. Barton. (*Proc. Inst. Rad. Eng.*, June, 1935, Vol. 23, No. 6, pp. 557–558: summary only.)

2981. ANALYSIS OF THE OPERATION OF VACUUM TUBES AS CLASS C AMPLIFIERS.—Mouromtseff and Kozanowski. (*Proc. Inst. Rad. Eng.*, June, 1935, Vol. 23, No. 6, pp. 562–563: summary only.)

RECEPTION

2982. RECEPTION OF WAVES WITH TUNED AERIAL AND APERIODIC RECEPTION.—E. Siegel. (*Hochfztech. u. Elekzakus.*, June, 1935, Vol. 45, No. 6, pp. 198–204.)

The circuit for aperiodic reception is shown in Fig. 1. Fig. 2 shows the circuit with a variable self-inductance L_z in the aerial, in addition to the fixed part L_k of the inductance which is coupled to the receiver. The object of the paper is to give a theoretical and experimental investigation of this arrangement. In Fig. 3 the grid voltage E_c corresponding to a given signal is depicted as a function of L_1, the total inductance of the aerial, and C_2, the tuning condenser. The E_c-surface has an upper and a lower ridge, separated by a deep valley. The ridges give particularly good reception conditions, which may be adjusted by proper choice of L_1 and C_2. The ridge curves are found to be rectangular hyperbolae (Fig. 4) and C_2 and L_1 may be obtained from eqns. 1 and 2; in these equations the effect of resistance has been neglected, which experience has shown to be permissible. The parts of the hyperbola in the region of negative reactance correspond to the insertion of a variable condenser in the aerial (Fig. 5). The position of the absolute maximum of E_c is then theoretically determined (eqns. 5, 6); here the values of the resistance are found to be of importance. Consideration of the minimum on the E_c-curve shows that reception is practically impossible if the aerial and grid circuits are independently tuned to the incoming signal.

Aperiodic reception with small L_1 (point A, Fig. 4) leads to eqns. 7 and 7a for the value of E_c ($E_{c\,ap}$); the resistance R_2 of the grid circuit largely determines the magnitude of the grid voltage. Other characteristic points of the hyperbola diagram are also considered (eqns. 8–10). Sharp tuning and high sensitivity are obtained when the ridge hyperbola is cut as nearly as possible at right angles during the tuning process. There is no fundamental distinction between reception with a tuned aerial and aperiodic reception; the difference is quantitative. In order to remain as near as possible to the absolute maximum of grid voltage with aperiodic reception, inductance should be inserted in the aerial when receiving long waves, and capacity for short waves.

The effect of the aerial itself on reception is next considered; Fig. 8 shows the influence of its capacity on the sharpness of tuning. The difficulty of reception is greatly increased when the aerial capacity is too high. The effect of waves of other frequencies on a system tuned to one frequency is shown by Fig. 9, which gives the curve of grid voltage as a function of frequency. Fig. 10 shows the curve of resonance wavelengths of a circuit as a function of the inductance in the aerial circuit, and Fig. 11 the corresponding values of L_1 and C_2 required to tune a circuit to certain frequencies. If the coupling of aerial and grid circuits in tuned reception is loose, interference from other stations than the wanted one is likely.

2983. OSCILLATING CIRCUITS WITH SLOWLY PULSATING ATTENUATION (THEORY OF THE SUPER-REGENERATIVE RECEIVER).—Erdélyi. (*See* 2954.)

2984. THE INFLUENCE OF THE INTERNAL RESISTANCE AND AMPLIFICATION COEFFICIENT OF A VALVE ON THE AMPLIFICATION AND SELECTIVITY.—P. Besson. (*L'Onde Élec.*, May, 1935, Vol. 14, No. 161, pp. 324–330.)

2985. THE USE OF LOW-FREQUENCY RETROACTION IN TRIODE [Output] VALVES.—M. Marinesco. (*Comptes Rendus*, 16th July, 1935, Vol. 201, No. 3, pp. 193–195.)

The circuit described gives a considerable increase of amplification and reduces the frequency distortion while keeping within a suitable value of non-linear distortion. Using, as a compensating impedance across the anode-circuit winding of the back-coupling transformer, an inductance coil in series with a copper-oxide rectifier (*i.e.*, a resistance varying with the anode current), the writer has reduced the input voltage necessary to give the full valve output from 10 volts to 0.2 volt, with no change in the 7% non-linear distortion.

www.americanradiohistory.com

2986. INTERACTION BETWEEN RADIO TRANSMITTING STATIONS [in Close Proximity].—R. V. Lvovich. (*Izvestia Elektroprom. Slab. Toka*, No. 4, 1935, pp. 9–12.)

A brief account is given of the experiments carried out in the Gorky Laboratory to investigate the interaction of two radio transmitters situated in close proximity to each other. The two transmitters used for this purpose were installed in the same room, and one of them (A) was operating on a wavelength of 47 m and delivering a power output of 20 w to an aerial inside the building, while the other (B) was operating on a wavelength of 108 m and delivering a power output of 400 w to an external aerial. Both microphones and a.f. oscillators were used to modulate the transmitters and the strictest precautions were taken to eliminate the possibility of a.f. coupling between the two systems. The main results obtained were as follows:—1. When both transmitters were modulated, B could be heard with a receiver (apparently located in the same building) tuned to A. When A was stopped B could not be heard any longer. The switching on and off of the modulation of A had no effect on the audibility of B. 2. Similar results were obtained with a receiver tuned to B except that reception of A was stronger than that of B in experiment 1, although the depth of modulation was the same in both cases. 3. The variation of the operating wavelengths of the transmitters had no effect on the phenomenon.

In order to explain these and similar observations made elsewhere in the U.S.S.R., the author suggests that the coupling between the transmitters is effected by means of electromagnetic waves travelling along the ground surface. These waves would naturally be propagated mainly along such conductors as rails, water pipes, cables, etc., and through the earth system of a radio station may reach the grids of the transmitter valves and so produce additional modulation of the carrier. In conclusion the author points out that while the explanation of the Luxembourg effect as put forward by Bailey and Martyn may hold good in the case of *large* separation between the transmitting, receiving and interfering stations, it obviously cannot be applied to the experiments described above.

2987. THE BEROMÜNSTER TESTS [on the "Luxembourg" Effect: April, 1935].—R. Stranger. (*World-Radio*, 28th June, 1935, p. 12.)

2988. ON THE PARALLEL CONNECTION OF TWO RECEIVERS TO THE SAME AERIAL.—A. A. Pistolkors. (*Izvestia Elektroprom. Slab. Toka*, No. 1, 1935, pp. 18–23.)

A mathematical investigation is given of the conditions arising when two receivers tuned to different frequencies are connected to the same (aperiodic) aerial. After a brief examination of various methods used for such connection, the case of two receivers connected by the shortest possible links to a common transmission line is discussed in detail. The discussion begins by deducing formulae for the determination of the current through a single receiver connected to the transmission line and also of the resistance and reactance offered by this receiver to frequencies different from that to which it is tuned. The effect of parallel connection of a second receiver on the input voltage to the first receiver is next examined and conditions are established for which the input voltage to either receiver is not reduced by more than 10%. It is pointed out in conclusion that satisfactory reception is possible only on wavelengths satisfying certain conditions and that only slight variations in tuning are permissible after the two receivers have been connected to the transmission line.

2989. MEASUREMENTS ON SOME BROADCAST RECEIVING AERIALS SUBJECT TO INTERFERENCE FROM AN ELECTRIC LIGHT SYSTEM: STUDY OF THE RATIO USEFUL-VOLTAGE/INTERFERENCE AT THE RECEIVER TERMINALS.—E. Aubort and W. Gerber. (*Bull. Assoc. suisse des Élec.*, No. 13, Vol. 26, 1935, pp. 349–353: in French.)

Measurements were made on some twelve aerials, indoor and outdoor, and the results are shown in Table I, where the last double column gives the maximum permissible interfering voltage on the network, in microvolts, on the assumptions indicated. These two half-columns give the values for "transverse" voltage (across the system terminals) and "longitudinal" voltage (system/earth) respectively, and Table III shows the limits between which they range for 4 definite types of aerial. Thus for indoor aerials the "transverse" permissible voltage may vary between 60 and 430 μv, the "longitudinal" between 16 and 216, whereas for external aerials with screened down-leads the corresponding figures are 14 000–21 000 and 3000–7 500. So although the system/earth voltages are those most necessary to keep down, the transverse voltages must not be neglected since their permissible values are only 2 or 3 times greater than those of the longitudinal voltages.

Table I also shows that it is, above all, the choice and quality of the earth which may vary the permissible voltages by as much as 4:1. Finally, the tables show that if a receiver is to receive without interference a wave of field strength 1 mv/m, the maximum permissible interfering voltage between lighting circuit and earth may range from about 10 μv to 10 000 μv according to the type of aerial. Obviously many more similar measurements will be needed before it will be possible to fix internationally a permissible value of interference voltage at the terminals of motors and other apparatus as they leave the works. Figs. 4 and 5 are curves of impedance, between the frequency limits 150 and 1 500 kc/s, of two lighting systems. Table IV gives the symmetrical (across the lines) and asymmetrical (system/earth) inductances, for 200, 700 and 1 200 kc/s, for 13 different "points" of a house system. The values range between 50 and 450 ohms, the asymmetrical values being generally greater than the symmetrical. Other measurements, particularly English and German, are mentioned as giving values between 50 and 500 ohms (*see*, for example, 2619 of August).

2990. MEASURING TECHNIQUE IN THE SUPPRESSION OF BROADCAST INTERFERENCE [Comprehensive Survey with Fundamental Formulae].—H. Reppisch. (*Funktech. Monatshefte*, June, 1935, No. 6, pp. 205–212.)

www.americanradiohistory.com

2991. THE STRUGGLE AGAINST RADIO INTERFERENCE [in France: Legal Steps].—A. Mestre. (*Génie Civil*, 6th July, 1935, Vol. 107, No. 1, pp. 18–19.)

2992. RADIO INTERFERENCE SUPPRESSION [Note on B.S. Specification No. 613, 1935].—(*Electrician*, 12th July, 1935, Vol. 115, No. 2980, p. 32.)

2993. RADIOELECTRIC INTERFERENCE [including the Measurement of "Intolerable" Interference, and the Swiss Definition and Regulations].—Roesgen. (*Bull. Assoc. suisse des Élec.*, No. 13, Vol. 26, 1935, pp. 342–349: in French.)

2994. LINE NOISES IN "UNIVERSAL" RECEIVERS [75% easily Eliminated by R. F. Choke].—E. G. Montoux. (*Rad. Engineering*, May, 1935, Vol. 15, No. 5, p. 16.)

2995. PROPOSALS FOR NOMENCLATURE IN THE TECHNIQUE OF DISTURBANCE ELIMINATION IN BROADCAST RECEPTION.—H. Reppisch. (*E.N.T.*, May, 1935, Vol. 12, No. 5, pp. 157–159.)

Disturbance elimination by the use of protective devices needs a special terminology. It is proposed to denote the quantity $100 \times |$(Voltage U_{km} produced by disturbance across terminals with protective device)/(Voltage U_{ko} produced by disturbance across terminals without protective device)| by the term "residual disturbance factor"; $\log_e |U_{ko}/U_{km}|$ gives the "degree of disturbance elimination" in nepers. Disturbances coming in *via* the mains are measured by a "transference factor," which is defined as $100 \times |$(Disturbing voltage U_s at receiver)/(Voltage U_k at the [mains] terminals of the source of disturbance)| (eqn. 3: Fig. 1). The "transference attenuation" is $\log_e |U_k/U_s|$ in nepers. The deleterious influence of a disturbance on the received programme is measured by a "disturbance factor," defined as $100 \times |U_s/$(Useful voltage U_e at receiver)|. The "disturbance attenuation" in nepers is correspondingly defined as $\log_e |U_e/U_s|$.

2996. PAPERS ON FREQUENCY MODULATION FOR ULTRA-SHORT WAVES.—Armstrong. (*See* 2971 and 2972.)

2997. THE DETECTION OF FREQUENCY MODULATED WAVES [Analysis of Process for Ultra-High and Micro-Wave Frequencies].—J. G. Chaffee. (*Proc. Inst. Rad. Eng.*, May, 1935, Vol. 23, No. 5, pp. 517–540.)

Detection is usually accomplished by distorting the spectrum by a selective network and then impressing the output voltages on the grid of a detector. The analysis leads to formulae giving the l.f. detection products in terms of the transmission characteristic of the distorting network and the maximum frequency shift during modulation. Experimental confirmation is given.

2998. A THREE-VALVE 5–10 METRE SUPER-REGENERATIVE RECEIVER.—(*Television*, July, 1935, Vol. 8, No. 89, pp. 412–414.)

2999. ULTRA-SHORT-WAVE RECEIVER WITH R.F. STAGE AND DISTORTIONLESS SUPER-REGENERATION [with Constructional Details].—H. Hertel. (*Funktech. Monatshefte*, May, 1935, No. 5, pp. 183–190.)

3000. A POCKET 5-METRE ONE-VALVER, *and* A STANDARD ONE-VALVE 5-METRE RECEIVER.—L. Pugh: Anon. (*Television*, July, 1935, Vol. 8, No. 89, pp. 383–384: p. 387.)

3001. DESIGN OF A 5-METRE SUPERHETERODYNE RECEIVER [Satisfactory One-Valve Circuit using X41 Triode Hexode].—K. Jowers. (*Television*, July, 1935, Vol. 8, No. 89, pp. 406 and 408.)

3002. HIGH QUALITY RADIO BROADCAST TRANSMISSION AND RECEPTION. PART II—THE RECEIVING SYSTEM [Measurement of Over-All Electro-Acoustic Fidelity of Broadcast Receivers, Indoor and Outdoor Tests].—S. Ballantine. (*Proc. Inst. Rad. Eng.*, June, 1935, Vol. 23, No. 6, pp. 618–652.) For Part I *see* 1934 Abstracts, p. 379. Part III will include a description of experimental-model high fidelity receivers.

3003. ACOUSTIC TESTING OF HIGH FIDELITY RECEIVERS [Illusion of Presence in Studio requires Reverberation Characteristics of Studio to be reproduced in Living Room: Loudspeaker Characteristics and Living-Room Reverberation must Co-operate: Testing Methods: etc.].—H. A. Wheeler and V. E. Whitman. (*Proc. Inst. Rad. Eng.*, June, 1935, Vol. 23, No. 6, pp. 610–617.)

3004. AN AUTOMATIC VOLUME EXPANDER TO COMPENSATE THE VOLUME COMPRESSION OF BROADCAST OR RECORDED PROGRAMMES.—W. N. Weeden. (*Electronics*, June, 1935, pp. 184–185.) *See* also 2634 and 2635 of August. Public opinion seems to indicate that a volume range of 50 db could be appreciated, instead of "our present restricted range of 35–40 db."

3005. AUTOMATIC BASS COMPENSATION ["ABC": to allow for the Reduced Volume Level in Home Reception].—Hazeltine Service Corporation. (*Rad. Engineering*, June, 1935, Vol. 15, No. 6, pp. 7–8.)

3006. HIGH FIDELITY RECEIVERS WITH EXPANDING SELECTORS ["XPS," for Symmetrical or Asymmetrical Expansion of Resonance Curve].—H. A. Wheeler and J. K. Johnson. (*Proc. Inst. Rad. Eng.*, June, 1935, Vol. 23, No. 6, pp. 594–609.) *See* also 3007.

3007. A VARIABLE-SELECTIVITY SUPERHETERODYNE: "XPS" APPLIED TO MEDIUM-PRICED RECEIVERS OF HIGHER FIDELITY.—Hazeltine Laboratories. (*Electronics*, June, 1935, pp. 180–183.) High-fidelity receivers of the XPS type have selectivity control by variable mutual inductance in two of the i.f. transformers. The abbreviation stands for "expanding selector" (*see* 3006).

www.americanradiohistory.com

3008. AUTOMATIC SELECTIVITY CONTROL.—G. L. Beers. (*Proc. Inst. Rad. Eng.*, June, 1935, Vol. 23, No. 6, p. 558: summary only.)

3009. RECEIVER BAND-WIDTH AND BACKGROUND NOISE [Doubled Band-Width would require Field-Strength Increase well over 3 db and perhaps of 8–10 db: etc.].—C. B. Aiken and G. C. Porter. (*Rad. Engineering*, May, 1935, Vol. 15, No. 5, pp. 7–9.)

3010. RECEIVING SET FOR SPECIALLY HIGH QUALITY REPRODUCTION [with H.F. Amplification at 280 V and 4 mA, Diode Rectification, Special System of Retroaction, etc.].—W. Nestel. (*Funktech. Monatshefte*, June, 1935, No. 6, pp. 231–233.)

The filtering out of r.f. from a.f., in the first a.f. stage, is accomplished by a r.f. choke and blocking condenser in the anode circuit and not in the grid circuit. This means that both frequencies pass through the valve, and the r.f. can be used for retroaction, to reduce the damping of the diode tuned circuit and thus to increase the over-all amplification up to 30 times. But for strong signals no retroaction is used: for distant reception ("where a cutting of the highest frequencies is desirable") it is brought in, but not until the volume control in the input circuit has been used to the full.

3011. THE DESIGN AND TESTING OF MULTI-RANGE RECEIVERS [Circuits and Unit Assembly Arrangement to improve Frequency Calibration and simplify Design: the Use of the "Piston" Attenuator in Testing].—D. E. Harnett and N. P. Case. (*Proc. Inst. Rad. Eng.*, June, 1935, Vol. 23, No. 6, pp. 578–593.)

3012. ANTENNA SWITCHING: SYSTEM FOR ALL-WAVE RECEIVERS, PROVIDING MAXIMUM PERFORMANCE IN LOW- AND HIGH-FREQUENCY BANDS.—A. G. Manke. (*Rad. Engineering*, May, 1935, Vol. 15, No. 5, pp. 10–11.)

3013. AUTOMATIC FREQUENCY CONTROL [in Superheterodyne Receivers, to centre the Signal Carrier in I.F. Band].—C. Travis. (*Proc. Inst. Rad. Eng.*, June, 1935, Vol. 23, No. 6, p. 566: summary only.)

3014. IMAGE SUPPRESSION IN SUPERHETERODYNE RECEIVERS [Specially Selective Aerial-Coupling Circuits, reducing Necessary Number of Signal-Tuned Circuits].—H. A. Wheeler. (*Proc. Inst. Rad. Eng.*, June, 1935, Vol. 23, No. 6, pp. 569–575.)

3015. DISCUSSION ON A PAPER ON THE EMISSION VALVE MODULATOR FOR SUPERHETERODYNES.—Wheeler. (*Proc. Inst. Rad. Eng.*, June, 1935, Vol. 23, No. 6, pp. 576–577.) Much of the material in the 1933 paper here discussed is contained in the articles referred to in 1933 Abstracts, pp. 328 and 450.

3016. SOME OBSERVATIONS ON THE EFFICIENCY OF FREQUENCY-CHANGING VALVES.—Delion. (*See* 3057.)

3017. THE SCOTT IMPERIAL ALL-WAVE TWENTY-TWO-VALVE SUPERHETERODYNE RECEIVER. (*World-Radio*, 28th June, 1935, p. 13.)

3018. WHAT NEXT IN RECEIVERS?—(*Rad. Engineering*, June, 1935, Vol. 15, No. 6, pp. 22–23 and 24.)

3019. RADIO RECEIVERS AT THE LEIPZIG FAIR.—Schwandt and others. (*Electronics*, May, 1935, pp. 164–165.) Based on various German papers (1851 of June, 1716 of May, etc.).

3020. RADIO ADVANCES IN GERMANY [including Sets with Electron Coupling giving Specially Good Selectivity with Simple Adjustment].—C. T. Zawadzki. (*Rad. Engineering*, May, 1935, Vol. 15, No. 5, pp. 14–16.)

3021. TWO-CIRCUIT TWO-VALVE REFLEX RECEIVER FOR D.C. AND A.C., WITH SHORT-WAVE RANGE: "LORENZ-REFLEX."—(*Funktech. Monatshefte*, May, 1935, No. 5, pp. 203–204.)

3022. ONE-CIRCUIT THREE-VALVE SHORT-WAVE BATTERY RECEIVER, "SCHALECOTROP 3" [primarily for German Overseas Broadcasts].—(*Funktech. Monatshefte*, June, 1935, No. 6, pp. 243–244.)

3023. AUTOMOBILE RADIO 1935 MODEL [and the Fight against Ignition Noise].—(*Electronics*, May, 1935, pp. 146–147.) Including the RCA under-car folded-back dipole, tuned to 7 m (taken as the worst wavelength) and having its receiver tapping at the exact mid-point.

3024. REDUCING THE MAINTENANCE COST OF A BROADCAST RECEIVER [Automatic Cutting-Out of Unrequired Valves on Tuning to Local Station.]—R. Oechslin. (*Radio, B., F. für Alle*, July, 1935, pp. 104–106.)

3025. AN IMPROVED RETROACTION AUDION [Distortion of Deeply Modulated Signals avoided by Diode System across Grid/Cathode of Audion].—N. Werner: Nestel. (*Radio, B., F. für Alle*, July, 1935, pp. 101–102.) A description of Nestel's circuits for battery and mains operation, said to give much less distortion than the ordinary audion in the "People's Receiver."

3026. A GOOD TONE CONTROL CIRCUIT FOR A PENTODE OUTPUT [Five Condensers with Special Switch: Usual Condenser/Variable-Resistance Combination shown to be Imperfect].—W. Daudt. (*Radio, B., F. für Alle*, July, 1935, pp. 107–109.)

3027. GRID BIAS BY CATHODE-CIRCUIT RESISTANCE: CALCULATION OF THE CONDENSER IN THE CATHODE CIRCUIT.—W. Daudt. (*Funktech. Monatshefte*, June, 1935, No. 6, pp. 223–225.)

3028. RADIO PANEL LAMPS AND THEIR CHARACTERISTICS.—J. H. Kurlander. (*Proc. Inst. Rad. Eng.*, June, 1935, Vol. 23, No. 6, p. 561: summary only.)

3029. GUIDING LINES FOR THE SERVICE TESTING AND REPAIR OF RADIO RECEIVERS.—F. Schaer-Emch. (*Bull. Assoc. suisse des Élec.*, No. 8, Vol. 26, 1935, pp. 211 and 214–215.)

www.americanradiohistory.com

AERIALS AND AERIAL SYSTEMS

3030. THE IMPEDANCE OF COMPLEX ANTENNAE WITH VIBRATORS OF ARBITRARY LENGTH.—G. I. Michelson and B. V. Braude. (*Izvestia Elektroprom. Slab. Toka*, No. 5, 1935, pp. 17–28.)

From the authors' summary:—By the method of induced e.m.fs, formulae 13, 14 and 21 are derived for the calculation of the following quantities:—(i) the mutual impedance of two rectilinear vibrators of arbitrary length ($2l$) for arbitrary spacings (d) and (h); (ii) the impedance of each separate vibrator; and (iii) the impedance of complex antennae with vibrators of arbitrary length. For the exceptional cases $d = 0$; $h = 0$; and $d = 0$, $h = 2l$, simplified formulae are introduced. As an example, the following quantities for a single vibrator of length $2l = \lambda_0 = 20$ m and $h = l$ are calculated in dependence on the equivalent length ml:—(i) the resistance referred to the current antinode, and (ii) radiation resistance (Fig. 5) and the impedance referred to the feeding point (Figs. 6 and 7).

3031. ON ACTIVE MIRRORS OF DIRECTIVE SYNPHASE-TYPE ANTENNAE.—M. S. Neimann. (*Izvestia Elektroprom. Slab. Toka*, No. 4, 1935, pp. 1–9.)

Author's summary:—The working conditions of synphase-type antennae with different spacings of the active mirror are discussed. The possibility is stated: (1) of choosing a spacing of the active mirror less than $\lambda/4$, and (2) of utilising the mirror efficiently over a large frequency range. Rules are given for determining the necessary mirror phase under different conditions.

3032. A STUDY OF RADIO FIELD-INTENSITY *versus* DISTANCE CHARACTERISTICS OF A HIGH VERTICAL [Anti-Fading] RADIATOR AT 1080 KILOCYCLES.—S. S. Kirby. (*Proc. Inst. Rad. Eng.*, June, 1935, Vol. 23, No. 6, p. 560: summary only.)

3033. FADING-REDUCING AERIALS [Theory and Practical Development of "High Dipole" Aerial: Comparison between Current-Excited and Potential-Excited Types, and Other Anti-Fading Aerials].—W. Hahnemann and R. M. Wundt. (*Lorenz Berichte*, June, 1935, No. 7, pp. 3–34.)

Leading to the conclusion that the potential-excited high dipole is the best. The example taken is the one at Frankfort, but others are being erected at Treves, Coblenz and Heilsberg.

3034. WLW [Cincinnati] INSTALLS "BLIND SPOT" ANTENNA ARRAY—AIMED AT TORONTO AREA. (*Electronics*, May, 1935, pp. 152 and 159.)

3035. ULTRA-SHORT-WAVE AERIAL SYSTEMS.—M. Harvey: D. B. Knock. (*Television*, July, 1935, Vol. 8, No. 89, pp. 422–423: 426.)

3036. ULTRA-SHORT-WAVE TRANSMITTING AERIAL FOR THE NEWARK POLICE SERVICE.—Bailey. (*See* 3246.)

3037. TRIPLE-DOUBLET FOR ALL-WAVE RECEPTION [at Waldorf-Astoria Hotel, New York].—(*Rad. Engineering*, May, 1935, Vol. 15, No. 5, pp. 17–18.)

3038. ON THE PARALLEL CONNECTION OF TWO RECEIVERS [tuned to Different Frequencies] TO THE SAME AERIAL.—Pistolkors. (*See* 2988.)

3039. THE EARTHING QUESTION [and the Results of Extensive Tests on Various Soils].—W. R. A. Kemp. (*Journ. Inst. Eng. Australia*, May, 1935, Vol. 7, No. 5, pp. 157–163.)

VALVES AND THERMIONICS

3040. A NEW TYPE OF GAS-FILLED AMPLIFIER TUBE [including Its Use as Ultra-Short-Wave Oscillator giving 20 Watts at 100 Mc/s].—Le Van and Weeks. (*Proc. Inst. Rad. Eng.*, June, 1935, Vol. 23, No. 6, p. 562: summary only.) *See* also 2649 of August.

3041. PAPERS ON MAGNETRON AND MAGNETOSTATIC OSCILLATORS. (*See* 2962/2964.)

3042. A SPECIAL SCREEN-GRID VALVE WITH AUXILIARY ANODE OUTSIDE THE ELECTRON STREAM, FOR VERY SHORT WAVES.—Zusmanovsky. (*See* 2969.)

3043. LOW-LOSS SOCKET FOR 955 ACORN VALVE FOR ULTRA-HIGH FREQUENCIES [with Special Material "Na-Ald Victron" to insulate Grid and Plate Terminals].—(*Electronics*, May, 1935, p. 167.)

3044. THE TIME OF FLIGHT OF ELECTRONS IN A CYLINDRICAL DIODE.—Fortescue. (*See* 2967.)

3045. ELECTRON BEAMS AND THEIR APPLICATION IN LOW-VOLTAGE DEVICES [of Receiving-Valve Size, Potentials below 300 Volts: Negative Conductance Devices].—H. C. Thompson. (*Proc. Inst. Rad. Eng.*, June, 1935, Vol. 23, No. 6, pp. 565–566: summary only.)

"Space currents of a few milliamperes have been concentrated into beams less than 0.01 inch wide in simple structures. Special control grids, associated with ordinary cathodes, have been found to combine good space-current control with effective beam formation, so that the properties of beam formation, control of beam width, direction, and current can be combined in a single device."

3046. SECONDARY ELECTRONIC CURRENT IN VALVES WITH MORE THAN TWO ELECTRODES.—A. Pinciroli. (*Alta Frequenza*, June, 1935, Vol. 4, No. 3, pp. 275–289.)

For a previous paper *see* 1934 Abstracts, p. 384. The classical method of measuring the primary and secondary currents, and de la Sablonière's more recent method (1933 Abstracts, p. 507) are outlined. To avoid the "laboriousness" of these methods the writer proposes a simpler one giving results which are in agreement with those of the other methods in spite of the simplifying assumptions made. Fig. 11 gives the results deduced by the new method from measurements on an

www.americanradiohistory.com

Arcturus 136A; the curves show γ_a and γ_{gs} as functions of the anode voltage, the control-grid voltage being kept constant and the s.g. voltage being 60 v: γ_a and γ_{gs} are the ratios of secondary to primary current at anode and screen grid respectively. The full points seen near the γ_a curve were obtained for the same valve by de la Sablonière's method. The writer points out that the study of such curves, thus easily obtained, should enable deductions to be made concerning the velocity distributions in a valve, and should help to extend our knowledge of the complex phenomena arising in the presence of secondary electrons.

3047. SECONDARY EMISSION OF ELECTRONS FROM COMPLEX TARGETS [dominated by Overlying Element in Low Energy Range and by Base Metal in Range of High Primary Energies].—P. L. Copeland. (*Phys. Review*, 1st July, 1935, Series 2, Vol. 48, No. 1, pp. 96–98.)

3048. THE ENERGY DISTRIBUTION OF SECONDARY ELECTRONS FROM MOLYBDENUM [by Magnetic Analysis: Correlation of Maxima with Critical Potentials].—L. J. Haworth. (*Phys. Review*, 1st July, 1935, Series 2, Vol. 48, No. 1, pp. 88–95.)

3049. THE SUITABILITY OF DIFFERENT VALVE CHARACTERISTICS FOR THE REGULATION OF AMPLIFICATION.—C. Otte. (*E.N.T.*, May, 1935, Vol. 12, No. 5, pp. 142–146.)

After a general account of the action of valves in the amplification and distortion of alternating voltage, in which the "klirr" factor is regarded as due practically to the second harmonic alone, regulation of amplification by changing the grid bias is theoretically considered for various types of (anode current)/(grid voltage) characteristic. The requirement of constant output alternating voltage in the anode circuit is assumed to be satisfied (this is the object of amplification regulation) and the amount of distortion produced is determined. The types of characteristic dealt with are (1) anode current proportional to (grid voltage)$^\gamma$, in which the relative amount of distortion is found to increase rapidly as the amplification decreases and the amount of regulation possible is limited, (2) anode current an exponential function of the grid voltage, in which the distortion increases linearly as the amplification decreases, (3) the ideal characteristic, giving a constant "klirr" factor over the whole range of regulation: the anode current here proves to be a logarithmic function of the grid voltage. Alternating grid voltage and grid bias are proportional for constant (alternating) anode current in this case. Fig. 3 shows the relative "klirr" factor in the three cases.

3050. SOME THEORETICAL CONSIDERATIONS RELATING TO VACUUM TUBE DESIGN [Design Data for New Types, using Existing Standard Parts, from Equations utilising Data from Previous Types].—G. D. O'Neill. (*Proc. Inst. Rad. Eng.*, June, 1935, Vol. 23, No. 6, pp. 563–564: summary only.)

3051. THE INFLUENCE OF THE INTERNAL RESISTANCE AND AMPLIFICATION COEFFICIENT OF A VALVE ON THE AMPLIFICATION AND SELECTIVITY.—P. Besson. (*L'Onde Élec.*, May, 1935, Vol. 14, No. 161, pp. 324–330.)

3052. ALL-METAL RECEIVING TUBES: I. THE INDUSTRY VIEWPOINT: II. THE MANUFACTURING TECHNIQUE.—Editorial: G. F. Metcalf and J. E. Beggs. (*Electronics*, May, 1935, pp. 148–149: 149–151.)

3053. ON THE EVOLUTION OF THE PIN-LESS VALVE HOLDER, *and* NEW [Pin-less] VALVES FOR MOTOR-CAR RECEIVERS.—(*Funktech. Monatshefte*, May, 1935, No. 5, p. 190: 191–192.)

3054. MIXING VALVES.—R. J. Wey: Strutt. (*Wireless Engineer*, June, 1935, Vol. 12, No. 141, p. 323.) Reply to Strutt (2287 of July).

3055. A NEW TUBE FOR USE IN SUPERHETERODYNE FREQUENCY-CONVERSION SYSTEMS [avoiding Coupling between Oscillator and Signal Circuits: a Five-Grid Valve, also useful for AVC and Volume Expansion].—Nesslage, Herold and Harris. (*Proc. Inst. Rad. Eng.*, June, 1935, Vol. 23, No. 6, p. 563: summary only.)

3056. CONVERSION CONDUCTANCE IN FREQUENCY-CHANGER TUBES [Definition, Equations, Measurement].—K. Steimel. (*Electronics*, May, 1935, p. 166: summary only.)

3057. SOME OBSERVATIONS ON THE EFFICIENCY OF FREQUENCY-CHANGING VALVES [and the Superior Conversion Amplification of Heptodes and Octodes over Triodes, etc: the Necessity for the Correct Polarity of the I.F. Transformer Secondary].—H. Delion. (*L'Onde Élec.*, May, 1935, Vol. 14, No. 161, pp. 331–336.)

The writer remarks that the enormous difference (sometimes 10 : 1) produced by the right or wrong polarity of the screened transformer (unscreened types gave none of this effect) seems to be a new result. Earthing the screen made no difference, and there was nothing special about the circuit to account for the result.

3058. GENERAL THEORY AND APPLICATION OF DYNAMIC COUPLING IN POWER TUBE DESIGN [eliminating Coupling and Grid-Bias Devices: Design of a Valve embodying both Driver and Power Sections].—C. F. Stromeyer. (*Proc. Inst. Rad. Eng.*, June, 1935, Vol. 23, No. 6, p. 565: summary only.)

3059. [S.F.R.] TRANSMITTING VALVES OF HIGH POWER FOR SHORT WAVES.—H. Gutton and R. Warnecke. (*L'Onde Élec.*, May, 1935, Vol. 14, No. 161, pp. 312–323.)

3060. RATINGS AND OPERATING INFORMATION ON LARGE HIGH-VACUUM TUBES.—Larson and Spitzer. (*Proc. Inst. Rad. Eng.*, June, 1935, Vol. 23, No. 6, pp. 561–562: summary only.)

www.americanradiohistory.com

3061. CONTINUOUSLY EVACUATED VALVES AND THEIR ASSOCIATED EQUIPMENT.—Burch and Sykes. (*Journ. I.E.E.*, July, 1935, Vol. 77, No. 463, pp. 129–146.) The full paper, with Discussion, summaries of which were referred to in 1466 of May.

3062. THE RECENT IMPROVEMENTS IN VACUUM TUBES [Receiving, Output, and Transmitting Valves: with a Supplement of Tables and Diagrams of French and Foreign Receiving Valves].—B. Decaux. (*L'Onde Élec.*, May, 1935, Vol. 14, No. 161, pp. 267–285: 285–311.)

3063. "THÉORIE ET PRATIQUE DES LAMPES DE T.S.F." [Book Review].—A. Kiriloff. (*Rad. Engineering*, May, 1935, Vol. 15, No. 5, p. 21.)

3064. RATINGS OF INDUSTRIAL ELECTRONIC TUBES [Discussion].—Pike and Ulrey. (*Elec. Engineering*, July, 1935, Vol. 54, No. 7, pp. 754–755.) *See* 754 of March.

3065. FUNDAMENTAL TUBE-TESTER DESIGN.—L. D. Smith. (*Rad. Engineering*, June, 1935, Vol. 15, No. 6, pp. 17–18.)

3066. APPLICATIONS OF GRAPHITE IN TUBE MANUFACTURE.—(*Electronics*, May, 1935, p. 160.) *See* also Szymanowitz, 1934 Abstracts, pp. 325–326.

3067. ANALYSIS OF THE ELECTRONIC EMISSION FROM A FILAMENT HEATED BY ALTERNATING CURRENT [and the Rôle of the Longitudinal Field due to Different Potentials at Different Parts of Filament: the Effect of Earthing: etc.].—Franzini. (*Alta Frequenza*, June, 1935, Vol. 4, No. 3, p. 347: summary only.)

3068. A STUDY OF THE CRYSTAL STRUCTURE OF HEAT-TREATED TUNGSTEN FILAMENTS [from Microphotographs].—R. P. Ben. (*Phys. Review*, 15th May, 1935, Series 2, Vol. 47, No. 10, p. 806: abstract only.)

3069. TEMPERATURE VARIATION OF CONTACT POTENTIAL [of Thoriated Tungsten Filament: Relation to Emission Measurements].—D. B. Langmuir. (*Phys. Review*, 15th May, 1935, Series 2, Vol. 47, No. 10, p. 813: abstract only.)

3070. THE THEORY OF THE THERMIONIC CONSTANTS FOR PURE METALS [Effect of Temperature-Variation of Work Function, and of Internal Field].—D. Blochinzew and S. Drabkina. (*Physik. Zeitschr. der Sowietunion*, No. 4, Vol. 7, 1935, pp. 484–500: in German.)

In the Dushman formula the A is taken to be a universal constant: this is not correct, and the writer shows how its value varies with the metallic structure. With metals such as the alkali metals, for which the "free electron" approximation is valid, only the variation of the work function with temperature is of importance; but with metals with strong internal fields not only this factor must be considered but also the coefficient of surface penetrability and the ratio of the "effective" mass of the electron to the mass of a free electron.

3071. THE CONTACT DIFFERENCE OF POTENTIAL BETWEEN TUNGSTEN AND BARIUM. THE EXTERNAL WORK FUNCTION OF BARIUM [Exact Measurements].—P. A. Anderson. (*Phys. Review*, 15th June, 1935, Series 2, Vol. 47, No. 12, pp. 958–964.)

A technique of measurement is described which provides for "adequate vacuum conditions and sufficiently thorough outgassing of surfaces," so that reproducible measurements are obtained. Clean tungsten was chosen as a reference surface and the metal surface to be measured against it was formed by thermal vaporisation. Contact differences of potential were measured with the help of an intense, narrow beam of slow electrons projected against a small, sharply defined section of the surface. The value 2.13 ± 0.05 volts was found for the W/Ba contact p.d. and 2.39 ± 0.05 equivalent volts for the external work function of Ba.

3072. THEORY OF THE WORK FUNCTIONS OF MONOVALENT METALS [Approximate Formula in Terms of Heats of Sublimation].—E. Wigner and J. Bardeen. (*Phys. Review*, 1st July, 1935, Series 2, Vol. 48, No. 1, pp. 84–87.)

3073. CALCULATION OF THE WORK FUNCTION IN THE SOMMERFELD MODEL OF A METAL.—H. Fröhlich. (*Physik. Zeitschr. der Sowietunion*, No. 4, Vol. 7, 1935, pp. 509–510: in German.)

3074. TEMPERATURE COEFFICIENT OF THE WORK FUNCTION FOR COMPOSITE SURFACES [Concentration Difference between Patches of Adsorbed Atoms a Function of Temperature: Theoretical Consequences].—A. Rose. (*Phys. Review*, 1st June, 1935, Series 2, Vol. 47, No. 11, pp. 889–890.) Preliminary letter on work continuing that referred to in 2659 of August.

3075. THE INFLUENCE OF IMPURITIES IN THE CORE-METAL ON THE THERMIONIC EMISSION FROM OXIDE-COATED NICKEL.—M. Benjamin. (*Phil. Mag.*, July, 1935, Series 7, Vol. 20, No. 131, pp. 1–24.)

Author's summary:—The commoner metallic impurities have been added in turn to a pure nickel, and the emission from the oxide-coated cores compared. It is found that these additions can profoundly affect the emission. An explanation put forward is that the amount of barium metal in the coating is dependent on the reducing power of the additive. This theory is supported by the results obtained when the addition is a powerful reducing agent, such as aluminium. It is found, also, that at very low temperatures non-saturation of the emission occurs, and that the critical temperature depends on the nature of the additive. The results obtained are explained by the theories of the mechanism of emission, due to Becker and Sears [Abstracts, 1932, p. 227] and Fowler and Wilson [1932, p. 642], which regard the coating as a semi-electronic conductor, whose conductivities and emission depend on the concentration of barium metal in the coating.

www.americanradiohistory.com

DIRECTIONAL WIRELESS

3076. ON THE ACCURACY OF DIRECTION FINDERS.—M. E. Starik. (*Izvestia Elektroprom. Slab. Toka*, No. 5, 1935, pp. 29–38.)

Author's summary:—The dependence of the accuracy of a direction finder on signal strength, sensitivity of the ear, intensity of statics and other factors is examined. Two methods of d.f. are compared: the minimum method (using a simple rotating frame) and the comparison method (with the Robinson system). With the same sensitivity of the ear to audibility increments, the second method appears to be more accurate. The paper also contains some quantitative data and examples.

3077. MARCONI'S WIRELESS PILOT [Micro-Wave Beacon: Sestri Levante Demonstration].—Marconi. (*Hydrographic Review*, May, 1935, Vol. 12, No. 1, pp. 159–160.) *See* also 1934 Abstracts, p. 620—four.

3078. ON THE QUESTION OF THE APPLICATION OF DECIMETRE WAVES [Micro-Waves between 10–100 cm] IN AVIATION.—W. Hahnemann. (*Lorenz Berichte*, April, 1935, No. 6, pp. 3–16.)

The various qualities of "metre," "decimetre" and "centimetre" waves are compared. It is concluded that for aviation the "decimetre" waves have no advantage over the "metre" waves except when more channels are necessary or when the sharpest possible beam concentration, with as small an aerial system as possible, is required. But work on "decimetre" waves is very important for aviation because it should lead to the improvement of "centimetre" wave technique, and *these* are the waves which will make practicable directive systems in the aircraft itself.

3079. A MARINE RADIO COMPASS [with Visual Indication by Dynamometer-Type Meter].—W. L. Webb. (*Bell. Lab. Record*, June, 1935, Vol. 13, No. 10, pp. 300–304.) The bearing is obtained by the rule "Rotate the loop in a direction opposite to the direction of meter deflection until its pointer is at zero."

ACOUSTICS AND AUDIO-FREQUENCIES

3080. SPHERICAL SOUND-WAVES OF FINITE AMPLITUDE [Application to Public-Address Loudspeakers].—N. W. McLachlan and A. L. Meyers. (*Proc. Phys. Soc.*, 1st July, 1935, Vol. 47, Part 4, No. 261, pp. 644–656.)

The theory of the distortion of spherical sound waves due to the non-linearity of the adiabatic pressure/volume relationship for air is discussed, starting from the differential equation for a loudspeaker horn of any cross-section. This is solved for spherical-wave propagation, and formulae are given for the calculation of the particle amplitude and pressure waves to a second approximation. The production of harmonics is considered, numerical examples are given, and "design formulae are deduced from which the area of the horn-throat to keep the distortion below a prescribed limit can be calculated."

3081. INVESTIGATIONS ON CONE LOUDSPEAKERS.—G. Schaffstein. (*Hochfztech. u. Elekzakus.*, June, 1935, Vol. 45, No. 6, pp. 204–213.)

This paper investigates (1) how the driving system of the loudspeaker and the radiating membrane work together with constant input from the receiving set, (2) the effect of radiation of the membrane in sub-divisions and transient membrane oscillations, and (3) the conditions for the occurrence of subharmonics.

§II: *Driving system.* 1. For an electrodynamical system, calculation of the *power factor* shows that the efficiency can be increased by increasing the length of wire in the loudspeaker coil, if the cross-section of the wire is correspondingly increased. For an electromagnetic system, the idea of *magnetic sensitivity* [(change of number of lines of force cut due to displacement of vibrating tongue)/(amount of displacement)] is introduced and the power factor is found to be the product of the magnetic sensitivity and the number of turns in the coil. This was checked experimentally. 2. *Negative stiffness* is the ratio (force of attraction towards pole of electromagnet)/(displacement of vibrating tongue), shown as *spring characteristic* in Fig. 1 and calculated, with a numerical example. The efficiency cannot be increased by increasing the pole-strength of the permanent magnet, without detracting from the quality of the reproduction. 3. The *effect of eddy currents* on the power factor is shown in Fig. 2.

§III: *Membrane oscillations.* 1. The *vibration amplitude of the membrane* depends on the mechanical impedance and the radiation resistance, which are calculated; the calculated degree of electro-acoustic efficiency is shown in Fig. 3 as a function of frequency. Fig. 4 shows a circuit for direct measurement of the membrane vibration amplitude and Fig. 5 gives experimental curves for two different points, showing sharp resonance effects. The phase of the membrane vibration at different points was also determined with the same apparatus and the oscillation form deduced (Figs. 6, 7); oscillation subdivisions have little influence on the amount of sound radiated. Fig. 8 shows the (acoustic pressure)/(frequency) curve of the loudspeaker. There is "automatic diminution" of the oscillating area of the membrane, due to the greater resistance to motion of the outer parts and consequent bending of the membrane. 2. *Transient phenomena* are shown in Figs. 9, 10.

§IV: *Subharmonics.* 1. The *theory* of production of subharmonics is explained in general terms; calculations from the differential equation show that they arise when the exciting frequency is *twice* the natural frequency of transverse oscillations. 2. Figs. 14–17 show oscillograms of transverse oscillations illustrating the onset of subharmonics, Fig. 18 illustrates their production by loading the boundary of the oscillating cone. 3. *Onset phenomena* are shown in Figs. 19, 20, and Fig. 21 illustrates the occurrence of "Ziehen," here the behaviour as regards frequency of the sudden onset and cessation of subharmonics. 4. An *equivalent electrical circuit* for the membrane is given in Fig. 22.

3082. REPRESENTATION OF FRESNEL'S DIFFRACTION PHENOMENA WITH SURFACE WAVES ON WATER AND SUPERSONIC WAVES [Characteristics of Wave Field of Circular Piston Membrane shown by Acoustic Field of Diffracting Slit: Experimental Demonstration].—E. Grossmann and E. Hiedemann. (*Zeitschr. f. Physik*, No. 5/6, Vol. 95, 1935, pp. 383–390.)

www.americanradiohistory.com

3083. COMPACT CLASS B PUBLIC ADDRESS UNIT [and the Common Unfair Treatment of "Class B": Necessity for Very Low Leakage Reactance of Output Transformer: etc.].—H. L. Shortt. (*Rad. Engineering*, May, 1935, Vol. 15, No. 5, pp. 12–13.)

3084. PRACTICAL DESIGN PROBLEMS OF LOUDSPEAKERS [and a New Double-Voice-Coil Speaker].—J. G. Tiedje. (*Proc. Inst. Rad. Eng.*, May, 1935, Vol. 23, No. 5, pp. 406–407: summary only.)

3085. ON THE EFFECT OF COVER DIMENSION ON THE FREQUENCY CHARACTERISTICS OF THE RAYLEIGH DISC [in Loudspeaker Field Calibrations].—I. Saito and K. Samura. (*Jap. Journ. of Eng. Abstracts*, Vol. 13, 1935, p. 52.)

3086. AN AUTOMATIC RECORDER FOR ACOUSTIC FIDELITY CURVES [One Curve in Three Minutes].—Wheeler and Whitman. (*See* 3003.)

3087. A.F. BAND RESPONSE OSCILLOSCOPE [for Production Testing of Loudspeakers, Amplifiers, etc.].—S. Bagno and M. Posner. (*Rad. Engineering*, June, 1935, Vol. 15, No. 6, pp. 19–20.)

3088. THE PLOTTING OF AUDIO-FREQUENCY CHARACTERISTICS [Amplifiers and Pick-Ups: and a Plea for the Broadcasting of A.F. Test Transmissions].—P. E. Klein. (*Funktech. Monatshefte*, May, 1935, No. 5, pp. 193–198.)

3089. INFLUENCE OF EDDY CURRENTS ON PICK-UP CHARACTERISTIC [Considerable Drop of Voltage at High Frequencies: Experimental Pick-Up with Needle as Armature].—I. S. Rabinovitch. (*Izvestia Elektroprom. Slab. Toka*, No. 4, 1935, pp. 43–47.)

3090. THE CONDENSER MICROPHONE [and the Added Impedance due to the Gaseous Layer between Diaphragm and Back Electrode].—K. Kobayasi and M. Okahara. (*Jap. Journ. of Eng. Abstracts*, Vol. 13, 1935, pp. 48–49.) For Kobayasi's paper on condenser microphone theory *see* 1934 Abstracts, p. 44.

3091. RUSTLING IN CARBON MICROPHONES [caused by Semi-Conducting Properties of Carbon].—R. Otto. (*Hochf:tech. u. Elek:akus.*, June, 1935, Vol. 45, No. 6, pp. 187–198.)

The theme of this paper is that not mechanical disturbances of contact points, but electrical phenomena, and, in fact, the semi-conducting properties of carbon, are the cause of rustling noises in carbon microphones. Various causes of mechanical disturbance are considered and rejected in § A; § B 1 deals with the theory and properties of the carbon contacts, regarded as forming a "sieve" resistance; the current density at the points of contact is high, raises the temperature there, and so causes decrease of resistance. In § B 2 the effect of films of foreign matter between the carbon grains is discussed and experiments on this point are described. The writer decides that the cause of rustling is not to be found in such films and, in support of this decision, describes in § II measurements of the rustling (circuit Fig. 12) with increasing direct voltage and change of resistance by pressure on the contacts (Figs. 13, 14). A carbon lamp filament is next investigated (circuit Fig. 17) and Fig. 16 gives curves of rustling and resistance as functions of voltage.

§ II 3 discusses the question whether there may be spontaneous variation of the conductivity of carbon considered as a semi-conductor; this is investigated experimentally by heating the carbon externally and the question is answered in the affirmative. The rustling produced by carbon microphones and by solid carbon resistances is shown to have the same cause by measuring the frequency spectrum of the rustling (§ II 4, Figs. 19–23). This shows that atomic processes must be involved and that the rustling is a material property of carbon, of the same order of magnitude in all kinds of carbon conductors.

3092. AN EXACT METHOD OF REPRESENTING, BY ELECTRICAL CIRCUIT ELEMENTS, CONVERSION DEVICES COMPRISING COUPLED ELECTRICAL AND MECHANICAL SYSTEMS.—R. D. Fay. (*Proc. Inst. Rad. Eng.*, May, 1935, Vol. 23, No. 5, p. 405: summary only.)

3093. SOME EXPERIMENTS WITH AN INTENSITY-MODULATED CATHODE-RAY TUBE [for Sound-on-Film Recording and Reproducing].—Hehlgans. (*See* 3198.)

3094. THE TRANSMISSION TECHNIQUE OF ELECTRICAL "DEAF AIDS."—H. Kalden. (*Funktech. Monatshefte*, June, 1935, No. 6, pp. 213–217.)

3095. EXPERIMENTAL DEAFNESS [Auditory Fatigue is really Inhibition].—A. F. Rawdon-Smith. (*Nature*, 6th July, 1935, Vol. 136, p. 32.)

3096. ON THE DETERMINATION OF THE [Optimum] FREQUENCY RANGE OF SOUND RECEIVERS USED IN AIRCRAFT SOUND LOCATION.—V. K. Iofe. (*Izvestia Elektroprom. Slab. Toka*, No. 4, 1935, pp. 15–21.) Based on the experimental data of various investigators concerning the sound spectra of aircraft in flight, and on the sensitivity characteristic of the ear.

3097. NEW ELECTRIC ORGAN BASED ON ALTERNATOR PRINCIPLE [Small Rotating Tone Wheels driven by Synchronous Clock Motor].—Hammond Clock Company. (*Electronics*, May, 1935, p. 156.)

3098. ELECTRICAL ORGAN TONES [from Exploring Electrodes rotating near Engraved Fixed Discs].—Compton Organ Company. (*Wireless Engineer*, June, 1935, Vol. 12, No. 141, p. 295.) *See* also 2686 of August.

3099. AUTOMATIC BIAS GENERATION FOR A.C. AMPLIFIERS [by Oscillator Unit with Variable Grid Leak in Grid Return].—V. V. Gunsolley. (*Electronics*, June, 1935, p. 191.)

3100. FLUX BALANCER FOR OUTPUT TRANSFORMER [Pentode "Bucking Scheme," for eliminating D.C. Component in Output Transformer of Single-Ended Amplifier].—E. R. Meissner. (*Electronics*, May, 1935, p. 161.) Curves show the great improvement in frequency response without change in maximum gain.

www.americanradiohistory.com

3101. ON THE DETERMINATION OF THE TRANSFERABLE POWER AND NON-LINEAR DISTORTION IN VALVES AND TRANSFORMERS.—J. F. K. Grosskopf. (At Patent Office Library, London: Catalogue number 75083: Kiel Thesis, in German.)

3102. THE USE OF LOW-FREQUENCY RETROACTION IN TRIODE VALVES.—Marinesco. (*See* 2985.)

3103. ALTERNATING-CURRENT OPERATED BEAT-FREQUENCY OSCILLATOR [giving Good Wave Form and Frequency Stability: Pentode Oscillators and Wünderlich Double-Grid Mixing Valve].—Harnwell and Van Voorhis. (*Review Scient. Instr.*, July, 1935, Vol. 6, No. 7, pp. 194–195.)

3104. PORTABLE SOUND METER [and a Hydraulic Method of Calibrating a Condenser Microphone].—Paolini. (*Alta Frequenza*, June, 1935, Vol. 4, No. 3, pp. 368–370.) A commercial instrument based on Paolini's work (1934 Abstracts, p. 212).

3105. A RECORDING TRANSMISSION MEASURING SET [recording, in 4 Minutes, the Insertion Loss at 50 Different Frequencies between 100 and 5 000 c/s].—M. A. Logan. (*Bell Lab. Record*, June, 1935, Vol. 13, No. 10, pp. 295–299.)

3106. CROSS-TALK [and Its Measurement].—S. Hanford. (*P.O. Elec. Eng. Journ.*, July, 1935, Vol. 28, Part 2, pp. 97–99.)

3107. STUDY OF THE NOISES OF AUTOMOBILES.—C. Brull. (*Génie Civil*, 6th July, 1935, Vol. 107, No. 1, p. 24: summary only.)

3108. NOISES PRODUCED BY THE URBAN DISTRIBUTION OF ELECTRICAL ENERGY AND NOISES DUE TO THE TRAFFIC IN THE STREETS.—L. Astier and P. Baron. (*Génie Civil*, 22nd June, 1935, Vol. 106, No. 25, pp. 606–611 and Plates.) Concluded from the issue of 15th June, No. 24.

3109. ON ERRORS IN NOISE MEASUREMENT BY THE AURAL METHOD [Balance or Masking].—M. Takata and K. Samura. (*Jap. Journ. of Eng. Abstracts*, Vol. 13, 1935, p. 46.)

3110. ACOUSTIC INSULATION STUDIED BY THE QUADRIPOLE [Four-Terminal Network] METHOD: PART I.—G. Sacerdote and A. Gigli. (*Alta Frequenza*, June, 1935, Vol. 4, No. 3, pp. 290–313.)

Authors' summary:—Some definitions of acoustic insulation are discussed and compared for a specially simple case of propagation, use being made of the concept of an acoustic quadripole. A short account is then given of the chief methods of measuring the acoustic insulation and the characteristic parameters of the quadripole; the relation between the insulating properties of a material, as measured by objective and by subjective methods respectively, is then discussed. Finally some relations between the insulating and absorbing properties of a given material are explained.

3111. THE ACOUSTIC INSULATION OF THE "PAVILION OF BROADCASTING" AT THE BRUSSELS INTERNATIONAL EXHIBITION.—I. Katel. (*Génie Civil*, 6th July, 1935, Vol. 107, No. 1, pp. 15–16.)

3112. THE USE OF LEAD FOR SOUND INSULATION IN HOUSES [Remarkably Successful Results].—(*Génie Civil*, 22nd June, 1935, Vol. 106, No. 25, pp. 616–617.)

3113. THE DETERMINATION OF ARC TEMPERATURE FROM SOUND VELOCITY MEASUREMENTS [Copper Arc in Air at Atmospheric Pressure: Time of Passage of Sound Wave through Arc Column measured by C-R Oscillograph]. I [Measurements]: II [Theory: Diffusion Effects and Possible Errors].—C. G. Suits: H. Poritsky and C. G. Suits. (*Physics*, June, 1935, Vol. 6, No. 6, pp. 190–195 and 196–202.)

3114. THE ELECTRODYNAMIC CHARACTERISTICS OF THE QUARTZ PIEZOELECTRIC OSCILLATOR [Quartz/Steel "Sandwich" in Water].—J. W. Speight. (*Canadian Journ. of Res.*, June, 1935, Vol. 12, No. 6, pp. 812–819.)

3115. THE AGGREGATION OF AEROSOLS BY MEANS OF SOUND WAVES [Microcinematographs give Velocity of Fall and Concentration].—O. Brandt and H. Freund. (*Zeitschr. f. Physik*, No. 5/6, Vol. 94, 1935, pp. 348–355.) *See* also 790 of March.

3116. A NEW APPARATUS FOR EMULSIFICATION, ETC., BY SUPERSONIC WAVES.—B. Claus. (*Zeitschr. f. tech. Phys.*, No. 7, Vol. 16, 1935, pp. 202–205.) For previous work *see* 2322 of July and 2705 of August.

3117. INTENSE SOUND [360–3 000 c/s] MAKES MILK MORE EASILY DIGESTIBLE.—L. A. Chambers. (*Sci. News Letter*, 6th July, 1935, Vol. 28, No. 743, p. 5.) *See* also 1934 Abstracts, p. 214.

3118. ON VORTEX MOTION IN GASEOUS JETS AND THE ORIGIN OF THEIR SENSITIVITY TO SOUND.—G. B. Brown. (*Proc. Phys. Soc.*, 1st July, 1935, Vol. 47, Part 4, No. 261, pp. 703–732.)

3119. AN ACOUSTIC INTERFEROMETER FOR A WIDE TEMPERATURE RANGE.—H. L. Andrews. (*Review Scient. Instr.*, June, 1935, Vol. 6, No. 6, pp. 167–168.)

3120. A CONTRIBUTION TO THE MEASUREMENT OF THE VELOCITY OF SOUND WITH THE ACOUSTICAL INTERFEROMETER.—E. Grossmann. (*Journ. Acoust. Soc. Am.*, October, 1934, Vol. 6, No. 2, pp. 106–107.) *See* 1934 Abstracts, p. 214.

3121. THE EFFECT OF PRESSURE ON SUPERSONIC DISPERSION IN GASES [Dispersion a Function of Quotient (Frequency/Pressure)].—W. Railston and E. G. Richardson. (*Proc. Phys. Soc.*, 1st July, 1935, Vol. 47, Part 4, No. 261, pp. 533–542.)

www.americanradiohistory.com

3122. THE EFFECT OF TEMPERATURE ON SUPERSONIC DISPERSION IN GASES.—H. L. Penman. (*Proc. Phys. Soc.*, 1st July, 1935, Vol. 47, Part 4, No. 261, pp. 543–548.)

3123. MAKING STANDING SOUND AND SUPERSONIC WAVES IN GASES VISIBLE [Demonstration Experiment with Kundt's Tube].—O. Brandt and H. Freund. (*Zeitschr. f. Physik*, No. 5/6, Vol. 95, 1935, pp. 415–416.) For previous work *see* 790 of March.

3124. FALSE ECHOES [due to Shoal of Fish] IN DEEP WATER.—J. A. Edgell. (*Hydrographic Review*, May, 1935, Vol. 12, No. 1, pp. 19–20.)

3125. "LITERATURZUSAMMENSTELLUNG AUS DEM GEBEIT DER TECHNISCHEN MECHANIK UND AKUSTIK" [Book Series Notice].—Zeller. (*Zeitschr. V.D.I.*, 6th July, 1935, Vol. 79, No. 27, p. 833.)

3126. "ÉLECTROACOUSTIQUE" [Book Review].—Ph. Le Corbeiller. (*Wireless Engineer*, July, 1935, Vol. 12, No. 142, p. 362.)

PHOTOTELEGRAPHY AND TELEVISION

3127. PLASTIC FILM AND PLASTIC TELEVISION [and the Physiological and Psychological Conditions necessary to give Stereoscopic Effects: Possible Methods].—R. Thun. (*Funktech. Monatshefte*, May, 1935, No. 5, Supp. pp. 31–33.)

Apart from the true "stereoscopic" condition (slightly different views of the object for the two eyes), other factors in the effect of solidity are (i) physiological, such as the focusing of the eye lenses, the inclination of the eye axes, the effect as the eyes are moved, etc.; and (ii) psychological, such as the apparent size and relative positions of the various components, perspective, air perspective (diminution of illumination differences, produced by stray light in the air space between object and observer), shadow, etc. For a flat picture to give the effect of solidity, the action of the physiological factors may be diminished and the psychological factors relied on; or the psychological factors may be emphasised. Thus very large pictures, viewed from a considerable distance, can easily give a certain amount of plastic effect, and the viewing of a small picture through a magnifying glass has a similar result: cathode-ray-tube images give a flatter effect than those of the older television receivers, because the latter always used magnifying lenses. Psychologically, the "setting" of the scene is of great importance; so also is the relation between the focusing of the lens, in taking the photograph, and the viewing distance in reproduction. But the best three-dimensional effect is produced by fulfilling the physiological conditions; the superiority, however, is not great enough to justify inconvenience in viewing, such as having to look through colour filters. Of true stereoscopic systems the only process not involving such inconvenience is the one depending on a special film ("linsenrasterfilm"—*see* 240 of January), which, however, seems at present only suitable for comparatively small pictures. The writer describes the principle of this system, which is shown to be one limit of a general system whose other limit is the ordinary two-picture stereoscope. For cinematography perhaps an intermediate system will be evolved, but for television this is more doubtful since the method demands very exact positioning of the picture elements.

3128. THE QUESTION OF LINE AND FRAME NUMBERS IN TELEVISION SCANNING [and the Problem of Flicker at 25 Frames/Second: Doubled Framing Frequency without Band-Width Increase, by Odd and Even Line Scanning for Successive Frames at the Transmitter: etc.].—M. von Ardenne. (*Funktech. Monatshefte*, May, 1935, No. 5, Supp. pp. 30–31.)

The method recently proposed "abroad," also involving a staggering of the line scanning but accomplishing this at the receiving end, is considered greatly inferior to the method where the staggering is done at the transmitter, because of the undesirability of adding complications to the receiver. The writer has tested the transmission method with an image-less raster of 180 lines and 50 frames/sec., and finds that even at great brightness the effect is almost free from flicker, and that there is no indication that the image definition would be inferior to that of a true 180-line image. The disadvantage of the staggered-line picture—the "shimmer" between the lines in the bright parts—is hardly troublesome even with 180 lines and should be quite negligible at 240–270 lines. The desirability of test transmissions, with staggered scanning giving a 50 framing frequency and an apparent 270 lines, is urged.

3129. CRITICAL FUSION FREQUENCY IN DIFFERENT SPECTRAL REGIONS, *and* AREA AND CRITICAL FUSION FREQUENCY OF FLICKER.—S. Hecht and E. L. Smith. (*Journ. Opt. Soc. Am.*, June, 1935, Vol. 25, No. 6, pp. 199 and 199–200: summaries only.)

3130. PAPERS ON FLUORESCENCE AND PHOSPHORESCENCE.—Szymanowski and others. (*See* 3208/3212.)

3131. POST-ACCELERATION ["Nachbeschleunigung"—after the Ray Deflection] IN CATHODE-RAY TUBES.—E. Schwartz. (*Funktech. Monatshefte*, June, 1935, No. 6, Supp. pp. 37–40: to be continued.)

This first part begins by outlining various proposed methods (with patent and literature references) for combining sensitivity and spot brightness by a second stage of acceleration, and goes on to discuss theoretically the effect of such an accelerating field on the action of the ray-focusing system and on the sensitivity. An expression is obtained which may be used as a figure of merit for a post-concentration system: it is the ratio of the "efficiencies" after and before post-concentration, where "efficiency" is defined as the product of spot brightness and deflecting-sensitivity divided by spot diameter. The shape of the characteristic curve of this figure of merit is shown in b, Fig. 4.

3132. A METHOD OF MEASURING PHASE SHIFT OVER A WIDE FREQUENCY RANGE.—V. L. Kreutzer. (*Izvestia Elektroprom. Slab. Toka*, No. 1, 1935, pp. 40–47.)

A description of a phase-meter developed primarily

www.americanradiohistory.com

to measure the phase shift in amplifiers employed in television apparatus. The meter is based on the use of a circuit comprising two valves in push-pull operating into a common load. If two voltages, of the same frequency but displaced in phase, are applied to the grids of the valves, the voltage across the common load is the vectorial difference between the two output voltages from each valve. In the phase-meter described this voltage is measured by means of a valve voltmeter, the scale of which, if desired, can be calibrated in phase angle. It is claimed that this meter is suitable for use over a wide frequency range, that its input resistance is very high for the whole range, that it does not introduce additional coupling between the stages of which the phase shift is measured, and that its error does not exceed ± 2% for the greater part of the scale, while only at the beginning of the scale is it of the order of ± 6%.

3133. THE "BOELLA EFFECT" IN HIGH RESISTANCES IN TELEVISION RECEIVERS.—Puckle. (*See* 3225/3226.)

3134. PRODUCING 1 TO 100 CYCLES [Constructional Details of Rotating-Drum/Photocell Combination, for Television Testing].—(*Television*, July, 1935, Vol. 8, No. 89, pp. 377–380.)

3135. INVESTIGATION OF "KIPP" [Time-Base] CIRCUITS FOR TELEVISION [Oscillographic Comparison of Glow-Discharge, Thyratron, and High-Vacuum Tubes: etc.].—F. Ring. (*Funktech. Monatshefte*, May, 1935, No. 5, Supp. pp. 34–35.)

In spite of certain advantages of gas-filled tubes, the high-vacuum valve is found to give the best and most consistent results, particularly at high frequencies (*e.g.* 1 Mc/s). The circuit of Fig. 2, derived from the old "Kallirotron" circuit, is specially suitable for television. It is advantageous to control the kipp oscillation by the *end* of the synchronising pause (between lines and frames, when the transmitter is cut out) rather than by the beginning as in all thyratron circuits. Another good circuit, using a single tetrode, is shown in Fig. 3 (a "Negadyne" connection): this gives stable oscillations even at very high frequencies, but with the valves available the writer was unable to obtain sufficiently high amplitudes for television. A specially designed valve should remove this difficulty.

3136. THE 10800-ELEMENT TELEVISION TRANSMITTER OF THE C.R.L. [with Travelling Beam from Bi-Spiral Disc: Cathode-Ray Reception].—A. A. Raspletin. (*Izvestia Elektroprom. Slab. Toka*, No. 5, 1935, pp. 39–49.) The synchronising system is photoelectric, and the phase and cut-off angle of the synchronising pulses are so chosen that they can be used for eliminating the return line of the receiver cathode-ray tube.

3137. THE MIHALY-TRAUB SYSTEM. FIRST DETAILS OF A NEW HIGH-DEFINITION OPTICAL-MECHANICAL SYSTEM [with "Mirror Wreath" and Rotating Polygon].—Mihaly and Traub. (*Television*, July, 1935, Vol. 8, No. 89, pp. 372–374.)

3138. NEW DEVELOPMENT IN TELEVISION: DIRECT TRANSMISSION BY THE LIGHT-BEAM SCANNER [German P.O. Demonstration].—(*Funktech. Monatshefte*, May, 1935, No. 5, Supp. pp. 29–30.)

3139. CATHODE-RAY TUBE FOR TELEVISION.—R. H. George. (*See* 3205.)

3140. [Amateur] TELEVISION EXPERIMENTS WITH CATHODE-RAY TUBES.—H. Richter. (*Radio, B., F. für Alle*, July, 1935, pp. 113–120: to be continued.)

3141. RECEIVING B.B.C. TELEVISION IN ICELAND.—F. L. Hogg. (*Television*, July, 1935, Vol. 8, No. 89, pp. 409–411 and 414.)

3142. THE PROBLEM OF LONG-DISTANCE TELEVISION [Final Part].—G. Valensi. (*Ann. des P.T.T.*, June, 1935, Vol. 24, No. 6, pp. 501–533.)

For previous parts *see* 2729 of August The present sections deal with: (a) Admissible levels on inter-urban television lines: it is concluded that with a concentric line of 7.5 mm diam. with a spacing of 16 km between two amplifiers of total gain 90 db (counter-retroaction 30 db) good quality television of 40 000 elements at 25 frames /sec. can be carried out so that the image can be enlarged to cover a maximum of one square metre. (b) Construction and regulation of line amplifiers (and the use of counter-retroaction). (c) Urban lines for connecting the television studios with the central television bureau or the ultra-short-wave station. (d) General and economic considerations (and future prospects: the difficulties in the way of series production of suitable line amplifiers: etc.).

3143. MILLION-CYCLE COAXIAL CABLE FOR TELEVISION? [New York/Philadelphia Cable ready April, 1936].—A.T. & T. Company. (*Electronics*, June, 1935, p. 189.)

3144. THE PRESENT POSITION OF TELEVISION [Editorial Summary].—B. E. Jones. (*Television*, July, 1935, Vol. 8, No. 89, pp. 400–405.)

3145. RCA STATEMENT ON TELEVISION [Danger of Premature Standardisation: etc.].—Sarnoff. (*Rad. Engineering*, May, 1935, Vol. 15, No. 5, p. 4: *Sci. News Letter*, 13th July, 1935, p. 29.)

3146. EUROPEAN TELEVISION THROUGH AMERICAN EYES.—A. W. Cruse. (*World-Radio*, 19th July, 1935, p. 14.)

3147. FILM AND TELEVISION [from Speech to International Film Congress], *and* TELEVISION IN THE CINEMA [Paper at Cardiff Conference].—Hadamovsky: West. (*Radio, B., F. für Alle*, July, 1935, pp. 110–112: *Electrician*, 5th July, 1935, p. 24.)

3148. SUMMARIES OF TELEVISION PATENTS TAKEN OUT IN FRANCE.—(In the monthly Patent Summaries in the *Annales des Postes Télégraphes et Téléphones* very special attention is being paid to television.)

www.americanradiohistory.com

3149. CONVENTION AT NICE FOR THE STUDY OF THE PROBLEMS OF TELEVISION.—(*Alta Frequenza*, June, 1935, Vol. 4, No. 3, pp. 373–375.)

3150. "FERNSEHEMPFANG" [Book Review].—M. von Ardenne. (*Wireless Engineer*, June, 1935, Vol. 12, No. 141, p. 325.)

3151. THE PROGRESS IN THE FIELD OF PHOTO-ELECTRIC CELLS [Survey: Comparison between Alkali, Resistance, and Barrier-Layer Types: Alkali Cells—Selective Photo-effect—Composite Cathodes—New Forms, including Hard-Glass Bulb with Quartz Window: Applications to Electron Optics, etc.].—W. Kluge. (*Zeitschr. f. tech. Phys.*, No. 7, Vol. 16, 1935, pp. 184–193.)

3152. CADMIUM MAGNESIUM ALLOY PHOTO-TUBES.—L. R. Koller and A. H. Taylor. (*Journ. Opt. Soc. Am.*, June, 1935, Vol. 25, No. 6, p. 184.)

3153. SENSITIVITY AND OUTPUT OF VARIOUS TYPES OF PHOTOCELLS.—R. Ruedy. (*Canadian Journ. of Res.*, June, 1935, Vol. 12, No. 6, pp. 840–847.)

3154. ON THE FREQUENCY RESPONSE OF PHOTRONIC CELLS [Method of Modulation criticised].—A. Bloch: Roe. (*Review Scient. Instr.*, June, 1935, Vol. 6, No. 6, p. 173). Prompted by Roe's paper (824 of March). A defect in the method of obtaining pure sine modulation is pointed out, and remedies suggested.

3155. THE DIRECTION OF RELEASE OF PHOTO-ELECTRONS BY X-RAY QUANTA IN COPPER-OXIDE PHOTOCELLS.—W. M. Tutschkewitsch. (*Physik. Zeitschr. der Sowietunion*, No. 3, Vol. 7, 1935, pp. 329–335: in German.)

The electrons are found always to move through the barrier layer, either from the copper oxide or from the barrier layer itself, towards the mother copper; never towards the copper oxide. The direction of irradiation, either by visible light or X-rays, has no effect on the direction of electron motion. For the generation of photo-e.m.f. only the oxide layer close to the barrier-layer electrode plays a part. The origin of this e.m.f. is evidently the same for visible light as for X-rays.

3156. QUANTUM EFFICIENCY OF CERTAIN LIGHT-SENSITIVE DEVICES [Photox, Selenium-Photovoltaic and Caesium Oxide Units, and Thermopile].—C. C. Hein. (*Journ. Opt. Soc. Am.*, July, 1935, Vol. 25, No. 7, pp. 203–206.)

3157. CURRENT-VOLTAGE RELATIONS IN BLOCKING-LAYER PHOTOCELLS [and the Different Properties of "Photronic" and "Photox" Cells: Non-Linearity and Rectification Not Essential: etc.].—L. A. Wood. (*Review Scient. Instr.*, July, 1935, Vol. 6, No. 7, pp. 196–201.)

3158. ON THE NEW PHOTOELECTRIC EFFECT IN CUPROUS OXIDE.—I. K. Kikoin. (*Physik. Zeitschr. der Sowietunion*, No. 5, Vol. 6, 1934, pp. 478–489: in German). The full paper, a summary of which was referred to in 222 of January: *see* also 1934 Abstracts, p. 507. E.m.fs up to 20v are observed.

3159. CHANGE IN THE PHOTOELECTRIC THRESHOLD OF THORIUM AND SIMILAR METALS BY OXYGEN [Increase of Sensitivity and Shift towards Longer Wavelength].—H. C. Rentschler and D. E. Henry. (*Journ. Opt. Soc. Am.*, June, 1935, Vol. 25, No. 6, p. 201: summary only.)

3160. INVESTIGATIONS OF THE INTENSITY DISTRIBUTION DETERMINING THE EXTERNAL PHOTOELECTRIC EFFECT.—F. Hlučka. (*Zeitschr. f. Physik*, No. 7/8, Vol. 95, 1935, pp. 486–498.)

For previous work by the writer *see* 1933 Abstracts, pp. 335 and 631, r-h columns, and 818 of March, 1935. The experimental curves given in the paper last referred to are here discussed again, with general considerations as to the nature of the external photoelectric effect. The writer concludes that the photoelectrons come from a thin surface film, of thickness decidedly smaller than the wave-length used, and the intensity distribution at the cathode surface determines the amount of photo-electric energy. Absorption of light at the cathode surface explains the connection between photo-current and angle of incidence of the light, for both directions of polarisation. Curves are given for the ratio of photocurrent to (1) total energy absorbed, (2) intensity distribution inwards and outwards from the cathode surface, and (3) absorption in a thin surface film, as a function of frequency (Fig. 1); the maxima are found to remain in the same place, though their height varies. The writer thinks that curves (3) give the best representation of the change of illumination intensity into photoelectric energy. Remarks on the selective photoelectric current are also made and other experimental curves are given.

3161. THE PHOTOELECTRIC EFFECT OF FILMS OF ALKALI METALS OF ATOMIC THICKNESS ON PLATINUM [Preliminary Communication].—H. Mayer. (*Physik. Zeitschr.*, 1st July, 1935, Vol. 36, No. 13, pp. 463–464.)

An experimental curve is given of the photo-current as a function of the film thickness, which does not show the maximum found by other observers for approximately monomolecular thick-ness. This can, however, be made to appear if a very small amount of dry air is allowed to act upon the alkali (here K). The maximum thus appears to be produced by the presence of oxygen atoms in the film. If the incident light is polarised with its electric vector perpendicular to the plane of incidence, the maximum does not appear even when oxygen is present. Curves of secondary emission and current/voltage curves were also taken. No maximum or minimum occurred in them.

3162. QUANTUM THEORY OF METALLIC REFLECTION.—L. I. Schiff and L. H. Thomas. (*Phys. Review*, 1st June, 1935, Series 2, Vol. 47, No. 11, pp. 860–869.) The full paper: *see* 2743 of August.

www.americanradiohistory.com

3163. THE TEMPERATURE VARIATION OF THE PHOTOELECTRIC EMISSION FROM THORIUM OXIDE.—J. H. Marchant, Jr. (*Physics*, June, 1935, Vol. 6, No. 6, pp. 202–206.)

The term "photoelectric current" is here used to mean "the difference between the electron emission given off by a surface with and without illumination," *i.e.* it is sought to distinguish between the thermionic emission produced by an actual increase in the temperature of the illuminated surface and the surface photoelectric effect obeying Einstein's equation. A platinum filament coated with thorium oxide was used (Fig. 1 shows the cell) and the light source was a mercury arc. A single-tube pliotron circuit (Fig. 2) was used for making the electrical measurements; the effect produced by the thermionic current was balanced out in the anode circuit of the pliotron and the galvanometer deflection when the photo-sensitive surface was illuminated was taken as a measure of the photoelectric current. Currents as small as 10^{-14} amp could be measured to within 1%. Filters were interposed and the photoelectric emission was found to be due chiefly to the part of the spectrum between 2500 Å and 3100 Å; curves of variation of current with anode voltage and temperature variation of saturation photoelectric current are given. A maximum was found at about 200°C. "A definite photoelectric emission was observed . . . whether the corresponding thermionic current was saturated or not. No photoelectric fatigue was observed."

3164. DIRECT ACTION OF LIGHT ON THE ELECTRICAL RESISTANCE OF METALS [Increase of Resistance observed by Majorana a purely Thermal Effect].—A. Etzrodt. (*Physik. Zeitschr.*, 15th June, 1935, Vol. 36, No. 12, pp. 433–441.)

For previous work in this direction by the writer *see* Abstracts, 1933, p. 573. The present paper describes experiments designed to determine whether or not the *increase* of electrical resistance of metals under the action of light, observed by Majorana (492 of February), is a true photoelectric effect (which would be expected to produce a *decrease* of resistance). The writer gives a critical discussion of Majorana's work (§ II) and describes in § III his own experiments; the principle is the complete separation of the thermal effect on the resistance from the photoelectric effect by working in a range including a point at which the temperature coefficient of resistance is zero. Bismuth wires of single crystals were used for this (curves of specific resistance Fig. 1); the arrangement of the apparatus is shown in Fig. 2 and described in § III 2. Fig. 3 shows the vacuum part of the apparatus. In § III 3 the experiments with thin films, single crystal wires, and constantan strip are described; the variations of resistance and of the photoelectric effect with temperature were simultaneously measured. Tables I and II give notes of actual experiments with bismuth wires, and Figs. 4, 5, 6 experimental curves. The whole photoelectric effect is found to vanish when the temperature coefficient of resistance is zero; the writer concludes that the whole effect must be a thermal one and that the new internal photoelectric effect postulated by Majorana is non-existent within the limits of present experimental technique.

3165. PHOTOELECTROMOTIVE FORCES IN CUPRITE CRYSTALS [Disagreement between Diffusion Theory and Experiment: a New Formula in Good Agreement, based on Theory of Continuous Circulation of Electrons].—A. and A. F. Joffé. (*Physik. Zeitschr. der Sowietunion*, No. 3, Vol. 7, 1935, pp. 343–364: in English.)

3166. THE PHOTOELECTRIC PROPERTIES OF THE (100) AND (111) FACES OF A SINGLE COPPER CRYSTAL.—N. Underwood. (*Phys. Review*, 15th March, 1935, Series 2, Vol. 47, No. 6, pp. 502–505.)

3167. PHOTO-SENSITIVITY OF RED MERCURIC IODIDE CRYSTALS, LOST ON AGEING, RESTORED BY 1 000–2 000 VOLTS FIELD.—F. C. Nix. (*Bell Lab. Record*, June, 1935, Vol. 13, No. 10, p. 318.) *See* also 1999 of June.

3168. THE PHOTOELECTRIC ABSORPTION OF GAMMA-RAYS IN HEAVY ELEMENTS [Theoretical Investigation].—Hulme, McDougall, Buckingham and Fowler. (*Proc. Roy. Soc.*, Series A, 1st March, 1935, Vol. 149, No. 866, pp. 131–151.)

3169. THE ENERGIES OF X-RAY PHOTOELECTRONS [Measured Values favour Crystal rather than Ruled Grating Scale of X-Ray Wavelength].—L. W. Alvarez. (*Phys. Review*, 15th April, 1935, Series 2, Vol. 47, No. 8, p. 636.)

3170. COMBINATION OF PHOTOCELL WITH AMPLIFIER [for Measurement of Small Photocurrents].—E. Einsporn. (*Physik. Zeitschr.*, 15th May, 1935, Vol. 36, No. 10, pp. 347–356.)

The circuit (Fig. 1) is designed to measure photocurrents of less than 10^{-10} amp. and uses a very small heating current in the amplifier valve, in order to increase its stability. Practical details of the arrangement are given; special valves with very small grid currents are used, and the method of determining their characteristics is described. The amplification is considered: Fig. 2 illustrates the geometrical interpretation of the amplification factor. The valve calibration and its test are described and tabulated; tests of the cell, with a determination of spectral energy distribution and unilluminated resistance, are given.

3171. A TWO-STAGE AMPLIFIER FOR SMALL ALTERNATING VOLTAGES WITH DIODE OUTPUT RECTIFICATION [for Photoelectric Analysis].—F. Müller and W. Dürichen. (*Zeitschr. f. Physik*, No. 1/2, Vol. 95, 1935, pp. 66–71.)

The circuit is shown in Fig. 1, where (a) and (b) give the connections to vacuum and barrier-layer photocells respectively. Fig. 2 shows the arrangement for rectification of the output voltage with a diode and for compensating so that the full-scale deflection is always given by the measuring instrument. Fig. 3 gives the diode characteristic. Details of the adjustments and sensitivity are given.

MEASUREMENTS AND STANDARDS

3172. ON THE AVOIDANCE OF ERRORS DUE TO THE "LEADS" IN RADIO-FREQUENCY MEASUREMENTS.—R. M. Davies. (*Phil. Mag.*, July, 1935, Series 7, Vol. 20, No. 131, pp. 75–97.)

The leads are regarded as a uniform transmission

www.americanradiohistory.com

line with distributed characteristics. Known results from the theory of such lines are applied, with approximations suited to radio-frequencies, to obtain a formula for the input impedance of the line, for which equivalent circuits are given. Numerical calculations are made for two sets of leads, 20 cm long, one of high capacitance and the other of high inductance, in the cases where they are terminated by (1) an ohmic resistance: here leads of high capacitance should be used with a small resistance and leads of high inductance with a high resistance; (2) an inductance: here the capacitance of the leads should be kept as small as possible; (3) a capacitance; here the capacitance of the leads should again be small; (4) a variable condenser with linear law: here short leads of high capacitance per unit length are advised; (5) capacitance and resistance: here leads of low inductance should be used and their effect corrected for when measuring the dielectric constant of aqueous solutions or other partially conducting substances. Graphs of calculated values are given in each case.

3173. EXPERIMENTS RELATING TO THE DISTRIBUTION OF ALTERNATING ELECTRIC CURRENTS IN THE EARTH AND THE MEASUREMENT OF THE RESISTIVITY OF THE EARTH [Discussion of Experimental Methods: Theory of Current Flow in Homogeneous and Stratified Media].—S. Whitehead and W. G. Radley. (*Proc. Phys. Soc.*, 1st July, 1935, Vol. 47, Part 4, No. 261, pp. 589–614.)

3174. A METHOD OF MEASURING PHASE SHIFT OVER A WIDE FREQUENCY RANGE.—Kreutzer. (*See* 3132.)

3175. A BRIDGE FOR MEASURING SMALL PHASE ANGLE.—C. H. Young. (*Bell Lab. Record*, May, 1935, Vol. 13, No. 9, pp. 277–280.)

3176. APPARATUS FOR THE MEASUREMENT OF DIELECTRIC CONSTANTS.—P. C. Henriquez. (*Journ. Scient. Instr.*, July, 1935, Vol. 12, No. 7, p. 236.) Designed by the writer of the paper dealt with in 2364 of July.

3177. MEASUREMENT OF THE DIELECTRIC CONSTANTS OF ELECTROLYTES [by Voltage Resonance Method eliminating Conductivity].—Beauvillain. (*Rev. Gén. de l'Élec.*, 11th May, 1935, Vol. 37, No. 19, pp. 598–599.)

3178. A CAPACITY MEASURING BRIDGE [using Post Office Box and Ballistic Galvanometer].—E. E. Wright and G. E. G. Graham. (*Journ. Scient. Instr.*, July, 1935, Vol. 12, No. 7, pp. 220–221.)

3179. A SIMPLE MODULATION METER [Diode Instrument giving Direct Reading of Percentage Modulation for a Range of Sinusoidal Modulation Frequencies].—J. B. L. Foot. (*Journ. Scient. Instr.*, July, 1935, Vol. 12, No. 7, pp. 216–217.)

3180. ELLIPTIC INTEGRALS OF LARGE MODULI [Tables useful in Calculation of Inductances of Cylindrical Coils].—H. B. Dwight. (*Elec. Engineering*, July, 1935, Vol. 54, No. 7, pp. 709–711.)

3181. THE A.C. RESISTANCE OF PARALLEL CONDUCTORS OF CIRCULAR CROSS-SECTION.—Arnold. (*See* 2960.)

3182. AN ELECTRON-COUPLED FREQUENCY METER FOR 10–100 METRES.—E. N. Adcock and G. Brown. (*Television*, July, 1935, Vol. 8, No. 89, pp. 375 and 432.)

3183. SOME DATA CONCERNING THE COVERAGE OF THE FIVE MEGACYCLE STANDARD FREQUENCY TRANSMISSION.—Hall. (*See* 2926.)

3184. LONGITUDINAL OSCILLATIONS OF CIRCULAR QUARTZ PLATES [cut Perpendicular to Optical Axis].—V. Petržílka. (*Ann. der Physik*, Series 5, No. 2, Vol. 23, 1935, pp. 156–168.)

The writer has already experimented with tourmaline oscillators (*see* 1933 Abstracts, p. 223) and now uses quartz plates to obtain the various types of oscillation predicted by Love. The experimental method and plates used are described (§1) and Love's theory is summarised (§2); oscillations of zero order (§3) and those with $n>0$ (§4) are discussed and shown in the figures. The modulus of elasticity and Poisson's constant are determined from the frequencies of the oscillations, and the electric axes from the lycopodium oscillation figures.

3185. OSCILLATIONS OF HOLLOW QUARTZ CYLINDERS [Type of Ring Oscillator with Very Low Temperature Coefficient of Frequency].—L. Essen. (*Nature*, 29th June, 1935, Vol. 135, p. 1076.) *Cf.* Tsi-Zé and Ling-Chao, 1934 Abstracts, p. 569.

3186. A MEASUREMENT OF THE EQUIVALENT ELECTRICAL DATA OF PIEZOELECTRIC CRYSTALS.—R. Günther. (*Hochf:tech. u. Elek:akus.*, June, 1935, Vol. 45, No. 6, pp. 185–186.)

The equivalent electrical circuit of a piezoelectric crystal is given in Fig. 1; Fig. 2 shows the circuit when the crystal is connected to an inductance L, to which L_2 may be added by opening a switch. The inductance L_k of the crystal can be derived from the change in resonance frequency on opening the switch (eqn. 3). The capacity is then calculable from the natural frequency of the crystal. The circuits used for the measurements are shown in Fig. 3 and numerical results are given in §IV.

3187. THE ELECTRODYNAMIC CHARACTERISTICS OF THE QUARTZ PIEZOELECTRIC OSCILLATOR.—Speight. (*See* 3114.)

3188. X-RAY EXTINCTION IN PIEZOELECTRICALLY OSCILLATING CRYSTALS [Warping of Lattice Planes during Vibration].—G. W. Fox and W. A. Fraser. (*Phys. Review*, 15th June, Series 2, Vol. 47, No. 12, pp. 899–902.)

3189. "STANDARD TIME THROUGHOUT THE WORLD" [Circular C406].—(*Tech. News Bull. Nat. Bur. of Stds.*, June, 1935, No. 218, p. 67: notice only.)

3190. ANODE POTENTIAL MEASUREMENTS [by the "Three Voltmeter Method for D.C."].—B. van Dam: Cosens. (*Wireless Engineer*, June, 1935, Vol. 12, No. 141, pp. 323–324.) Prompted by Cosens's letter (1594 of May).

www.americanradiohistory.com

3191. VOLTAGE MEASUREMENT IN BROADCAST APPARATUS [Errors due to Current Consumption: American and German Voltmeters compared: Methods of Correcting the Error].—F. Bergtold. (*Funktech. Monatshefte*, May, 1935, No. 5, pp. 177–180.)

3192. A MULTI-RANGE PUSH-PULL THERMIONIC VOLTMETER [Robust, with Symmetrical Input Circuit: using One Double-Diode Triode].—G. Builder. (*Journ. Inst. Eng. Australia*, November, 1934, Vol. 6, No. 11, pp. 444–445.)

3193. MULTI-RANGE VALVE VOLTMETER [giving Input Resistance of more than 5 Megohms up to 1.2 Mc/s].—(*Journ. Scient. Instr.*, July, 1935, Vol. 12, No. 7, pp. 239–240.)

3194. A PEAK VOLTMETER [with Gas-Filled Grid-Controlled Tube].—J. J. Ruiz. (*Review Scient. Instr.*, June, 1935, Vol. 6, No. 6, pp. 169–171.)

3195. THERMOCOUPLE USED IN LOW-VOLTAGE TUBE VOLTMETER.—C. Murray. (*Electronics*, June, 1935, pp. 190–191.)

3196. Q-METER [for Direct Measurement of Reactance/Resistance Ratio in Range 50 kc to 50 Mc per Second].—(*Electronics*, May, 1935, p. 167.)

3197. THE "PISTON" OR "TROMBONE" ATTENUATOR FOR SIGNAL GENERATORS.—Harnett and Case. (*See* 3011.)

SUBSIDIARY APPARATUS AND MATERIALS

3198. SOME EXPERIMENTS WITH AN INTENSITY-MODULATED CATHODE-RAY TUBE [for Sound-on-Film Recording and Reproducing].—Hehlgans. (*Zeitschr. f. tech. Phys.*, No. 7, Vol. 16, 1935, pp. 194–200.)

Continuation of the work dealt with in Abstracts, 1933, p. 629. The new tube is of smaller diameter and only slightly greater length than the REo34 broadcast receiving valve, and has a similar base. Various experimental electrode systems are described. Tests on control by an external electrode showed how easily the cathode ray could be affected by external electric fields or by the equivalent wall charges on the glass, and led to the enclosure of the standard tube in an earthed metallic sheath which left only the screen end of the tube exposed. They also showed that the control cylinder could be arranged (contrary to usual practice) between anode and screen, giving a convenient control which is advantageous for many purposes. With an external control electrode it is desirable to provide also an ordinary Wehnelt cylinder, not for controlling but for adjusting the repose condition of the ray. Another special electrode system of general application involves a "screen anode" (Fig. 4) which completely encloses the remaining electrodes (cathode, Wehnelt cylinder) and thus shields the screen from stray light from the cathode and from stray electron rays, protects against external interfering fields, and forms a radiation-guard for the hot cathode.

The electrode systems discussed in Section III are concerned with the formation of a fine-line "spot" instead of a circular one (*cf.* von Ardenne, 1474 of May). The use of a straight-filament and reflector combination equivalent to a cylindrical parabolic mirror was abandoned for practical reasons, and an electron-optical anamorphotic system adopted, either electrostatic or magnetic: in the first case a double condenser of four plates was used, in the second a symmetrical four-pole electro-magnet system with two N poles facing each other and two S poles similarly opposed. Special attention is paid to this second arrangement, which gives a particularly sharp line. If the magnets are fed with a.c., the effect on the eye and on a "still" camera is to give two lines crossing at right angles (Fig. 8). It is pointed out that by the use of an anamorphotic arrangement such as the four-pole magnet system a large, structureless spot may be employed instead of the usual sharp one.

Section IV deals particularly with:—(a) the application of retroaction to the new tube, to allow it to be controlled directly from the recording microphone, without amplification: this is a difficult problem for a satisfactory solution, which was only reached when an auxiliary electrode ("7" in Fig. 9) had been introduced between cathode and Wehnelt cylinder; and (b) the use of the tube also as a sound-on-film *reproducing* device (Fig. 10) by making the control (Wehnelt) electrode photo-electrically active.

3199. ELECTRON BEAMS AND THEIR APPLICATION IN LOW-VOLTAGE DEVICES.—Thompson. (*See* 3045.)

3200. POST-ACCELERATION IN CATHODE-RAY TUBES.—Schwartz. (*See* 3131.)

3201. THE DISCHARGE MECHANISM IN ALL-METAL GAS DISCHARGE TUBES, PARTICULARLY CANAL-RAY TUBES.—H. Seemann and G. Orbán. (*Ann. der Physik*, Series 5, No. 2, Vol. 23, 1935, pp. 137–155.)

3202. A THREE-PHASE ROTATING-FILM CATHODE-RAY OSCILLOGRAPH [Three Tubes on Common Film Chamber: for Accurate Work on Frequencies up to 100 000 c/s: Records several Yards long].—Whelpton. (*Journ. Scient. Instr.*, July, 1935, Vol. 12, No. 7, pp. 226–233.)

3203. DUPLEX CATHODE-RAY OSCILLOGRAPH [for Simultaneous Observation or Photography of Two Separate Phenomena, either Transient or Repetitive].—Garceau. (*Review Scient. Instr.*, June, 1935, Vol. 6, No. 6, pp. 171–172.)

3204. THE CATHODE-RAY OSCILLOGRAPH [Survey, including the RCA 3- and 5-Inch Tubes].—Diehl. (*Rad. Engineering*, June, 1935, Vol. 15, No. 6, pp. 10–15: to be continued.)

3205. CATHODE-RAY TUBES AND THEIR APPLICATION [Discussion].—Stinchfield: George. (*Elec. Engineering*, July, 1935, Vol. 54, No. 7, pp. 749–750.) *See* 858 of March; also George, Abstracts, 1928, p. 228, and 1929, p. 584.

www.americanradiohistory.com

3206. CATHODE-RAY OSCILLOGRAPH CIRCUIT FOR SIMULTANEOUS OBSERVATION OF SEVERAL WAVES BY USE OF SUCCESSIVE SWEEPS.—George, Roys and others. (*See* 3205.)

3207. A SIGNAL-SYNCHRONISED SWEEP CIRCUIT FOR CATHODE-RAY OSCILLOGRAPHY.—Lansil. (*Electronics*, May, 1935, pp. 158–159.)

Developed at the Massachusetts Institute of Technology. If the signal which is being viewed changes its frequency, the sweep frequency changes in proportion, so that the arrangement is self-synchronising. It is possible to increase the sweep velocity without increasing the sweep frequency, and a very small part of the wave may be enlarged to cover the entire screen without producing multiple traces.

3208. IMPROVED FLUOROMETER METHOD FOR MEASURING THE DECAY TIME OF FLUORESCENT RADIATION, *also* DURATION OF ILLUMINATION AND LAW OF DECAY [Analysis of Experimental Curves: Exponential Law], *and* INFLUENCE OF THE CONCENTRATION OF THE COLOURING MATTER AND THE VISCOSITY OF THE SOLVENT ON THE DECAY TIME OF FLUORESCENCE.—Szymanowski. (*Zeitschr. f. Physik*, No. 7/8, Vol. 95, 1935, pp. 440–449: 450–459: 460–465.) For "Influence of molecular rotation on the measurements of decay time" see *ibid.*, pp. 466–473.

3209. THE HYPERBOLIC LAW OF THE DECAY OF PHOSPHORESCENCE.—Curie. (*Comptes Rendus*, 8th July, 1935, Vol. 201, No. 2, pp. 142–143.) Prompted by the work of Lewschin and Antonow-Romanowsky, 1934 Abstracts, p. 627.

3210. THE DECAY OF PHOSPHORESCENCE IN ZINC PHOSPHORS IN SINGLE CRYSTALS [Its Relation to the Size of the Crystals: etc.].—Antonow-Romanowsky. (*Physik. Zeitschr. der Sowietunion*, No. 3, Vol. 7, 1935, pp. 366–379: in German.) For previous work *see* 1934 Abstracts, p. 627. The tests were on zinc sulphide crystals.

3211. INFLUENCE OF THE PASSAGE OF AN ELECTRIC CURRENT ON THE PHOSPHORESCENCE OF ZINC SULPHIDE.—Déchène. (*Comptes Rendus*, 8th July, 1935, Vol. 201, No. 2, pp. 139–142.)

3212. THE DEPENDENCE OF ELECTRICALLY EXCITED PHOSPHORESCENCE OF THIN FILMS OF Al_2O_3 ON THE ADDITION OF OTHER MATERIALS [Oxide Films on Alloys of Aluminium with Various Metals: Decrease of Luminosity with Zn, Increase with Mn: Conditions for Saturation].—Betz. (*Zeitschr. f. Physik*, No. 3/4, Vol. 95, 1935, pp. 189–197.)

3213. NEW TYPES OF LEAD-IN FOR VACUUM CONTAINERS [Seals between Glass and the New Ceramic Materials: etc.].—H. Handrek. (*Zeitschr. V.D.I.*, 15th June, 1935, Vol. 79, No. 24, pp. 758–759.) For previous papers *see* 539 and 545 of February and 1629 of May; also 1934 Abstracts, p. 454, l-h column. *See* also 1628 of May.

3214. A MECHANICALLY OPERATED VALVE DESIGNED TO WITHSTAND ATMOSPHERIC PRESSURE, FOR USE IN HIGH VACUUM WORK.—Chiles. (*Review Scient. Instr.*, July, 1935, Vol. 6, No. 7, pp. 202–203.)

3215. SOLDERING ALUMINIUM/BRASS JOINTS [*e.g.* for Foil-Covered Apertures in Vacuum Vessels].—Sims. (*Journ. Scient. Instr.*, July, 1935, Vol. 12, No. 7, p. 233.)

3216. THE TEMPERATURE COEFFICIENT OF HOT-WIRE VACUUM METERS AND VACUUM THERMOELEMENTS [and Its Reduction].—Kobel. (*Bull. Assoc. suisse des Élec.*, No. 8, Vol. 26, 1935, pp. 196–199: in German.)

3217. AN IMPROVED ABSOLUTE MANOMETER FOR PRESSURES FROM ONE-THOUSANDTH OF A MICRON TO ONE ATMOSPHERE.—Baker and Boltz. (*Review Scient. Instr.*, June, 1935, Vol. 6, No. 6, pp. 173–174.)

3218. A NEW METHOD FOR THE EXTRACTION OF GASES FROM METALS [by Combination of Discharge Tube and Vacuum Pump].—Moreau and others. (*Comptes Rendus*, 16th July, 1935, Vol. 201, No. 3, pp. 212–214.)

3219. THE ELECTROCAMERA, A NEW APPARATUS FOR INVESTIGATING DIELECTRICS.—Gemant. (*World Power*, July, 1935, Vol. 24, No. 139, pp. 8–12.) Based on the writer's work dealt with in 1931 Abstracts, p. 396.

3220. THE DIFFERENTIAL CONDENSER [and Its Various Uses and Methods of Connection: including the Double-Ended-Rotor Type—"Flügelneutrodon"].—Schad. (*Funktech. Monatshefte*, June, 1935, No. 6, pp. 217–218.)

3221. PAPER *versus* ELECTROLYTIC FILTER CONDENSERS [and the Relation between Power Factor and Filtering Efficiency in Smoothing Circuits].—(*Electronics*, May, 1935, p. 160.)

3222. A.C.-TYPE ELECTROLYTIC CONDENSERS.—Deeley. (*Rad. Engineering*, May, 1935, Vol. 15, No. 5, pp. 19–20.)

3223. THE DIELECTRIC CONSTANT AND RESISTANCE OF COLLOIDAL SOLUTIONS [Increase with Decreasing Frequency].—Fricke and Curtis. (*Phys. Review*, 15th June, 1935, Series 2, Vol. 47, No. 12, pp. 974–975.)

3224. DIELECTRIC LOSSES IN FLUID INSULATING MATERIALS [at Frequencies up to 15×10^7 c/s and Various Temperatures: Methods for Loss Determination by Calorimetry: Confirmation of Debye's Dipole Theory for Transformer Oil].—Rieche. (*Zeitschr. f. Physik*, No. 3/4, Vol. 95, 1935, pp. 158–178.)

3225. THE BEHAVIOUR OF HIGH RESISTANCE AT HIGH FREQUENCIES: OBSERVATIONS ON THE BOELLA EFFECT [attributed to Inter-Molecule or Inter-Particle Capacity Actions, etc.].—Puckle: Boella. (*Wireless Engineer*, June, 1935, Vol. 12, No. 141, pp. 303–309.)

Measurements by Sowerby and Marshall are compared with those of Boella (1934 Abstracts, p. 454) and certain conclusions are drawn: "for

www.americanradiohistory.com

high-definition television receivers the effect [added conductance at high frequencies, 'beyond that due to stray capacity' and varying with the method of manufacture] should be borne in mind"—owing to the low anode resistances necessarily involved, to which the high grid resistances are effectively in parallel.

3226. THE BEHAVIOUR OF HIGH RESISTANCES AT HIGH FREQUENCIES [Approximate Calculation of Reduction of Effective Resistance at High and Very High Frequencies due to Self Capacitance]. — G.W.O.H. (*Wireless Engineer*, June, 1935, Vol. 12, No. 141, pp. 291–295.) Editorial prompted by 3225.

3227. QUARTZ CRYSTAL FILTERS [Ladder and Lattice Type Networks for Band-Pass, Transformer Circuits for High- and Low-Pass Filters].—W. P. Mason. (*Bell Lab. Record*, June, 1935, Vol. 13, No. 10, pp. 305–310.)

3228. AMPLIFIER FOR CONTINUOUS CURRENT, WORKING WITH "REVERSIBLE INSTABILITY" [based on "Kipp" Action of Screen-Grid Valve: a Simple and Stable Two-Stage Circuit—Tetrode and Triode—with Current Amplification over 10^6 at Moment of Instability].—Pistoia. (*Alta Frequenza*, June, 1935, Vol. 4, No. 3, pp. 260–274.)

Fig. 1 shows a family of static characteristics of a Philips B442 tetrode, for a screen-grid potential of 100 v and various values of control-grid potential; Fig. 5, on a different scale, extends these curves to more negative control-grid potentials. As the anode voltage is increased from zero the anode current rises at first, but there is then a down-slope (negative resistance region) due to secondary emission from the anode. Around the point where the anode voltage approaches the value of the s.g. voltage, and the s.g./plate field (hitherto accelerating the secondary electrons) disappears, the curve suddenly rises again and tends to saturation. If a resistance R_a of, say, 130 000 ohms is connected in the anode circuit of such a valve, and an anode battery of 190 v is used, the straight line from "190 v" inclined at an angle arc cot R will represent the characteristic of the resistance amplifier constituted by the external anode circuit. The figure shows that this straight line (dotted line through D and A) cuts all the curves from -12 to -7 control-grid potential at points of stable working such as D; but that directly the control-grid potential is reduced to -6, so that the line cuts the characteristic at A, the anode current suddenly jumps to a value given by the point of intersection with the curve -6, *but in the first part of that curve*—namely the point B. This instability between A and B is a reversible effect, though not identically: proceeding with *increasing* absolute values of control grid potential a sudden jump will occur, but between the points C and D of the curve -7. It is this phenomenon of "reversible jump" which is employed for the "electronic relay" action of this amplifier. Figs. 7 and 8 show the advantage, in a larger proportional "jump," of higher s.g. voltages. The practical circuit is shown in Fig. 11, while Fig. 12 is a laboratory circuit for demonstrating the high current-amplifying effect.

3229. THERMIONIC VALVE RELAY [Control Ratio better than 1 : 100 Million: Combination of High Mutual Conductance Pentode and Thermally Operated Vacuum Switch].—(*Pharmaceuticals and Cosmetics*, July, 1935, p. 76.)

3230. A NEW FERROMAGNETIC METAL, GADOLINIUM.—Urbain, Weiss and Trombe. (*Comptes Rendus*, 24th June, 1935, Vol. 200, No. 26, pp. 2132–2134.)

Absolute saturation is 253.5 c.g.s. units, compared with 221.7 for iron. The atomic moment is more than three times that of iron.

3231. INFLUENCE OF MAGNETISATION UNDER HEAT, AND OF CRYSTALLISATION, ON THE SHAPE OF THERMOMAGNETIC CURVES.—Michel and Chaudron. (*Comptes Rendus*, 24th June, 1935, Vol. 200, No. 26, pp. 2171–2173.)

3232. MAGNETISATION UNDER HEAT OF FERROMAGNETIC POWDERS [Remanence dependent on Field, Grain Size and Crystalline Structure].—Forestier. (*Comptes Rendus*, 1st July, 1935, Vol. 201, No. 1, pp. 45–47.)

3233. SOME OBSERVATIONS ON THE MOVEMENT AND DEMAGNETISATION OF FERROMAGNETIC PARTICLES IN ALTERNATING MAGNETIC FIELDS.—Davis. (*Physics*, June, 1935, Vol. 6, No. 6, pp. 184–189.)

3234. ON THE MAGNETISATION CURVE OF IRON SINGLE CRYSTALS [Incorrectness of Hill's Results ?].—Jaanus: Hill. (*Physik. Zeitschr. der Sowietunion*, No. 3, Vol. 7, 1935, pp. 380–384: in German.)

3235. CONTRIBUTIONS TOWARDS AN EQUATION FOR THE HYSTERESIS LOOP [Equations in Polar Coordinates: One suffices for Weak Fields, Two for Strong Fields].—Sequenz. (*Arch. f. Elektrot.*, 11th June, 1935, Vol. 29, No. 6, pp. 387–394.)

3236. THE NUMBER OF ELECTRONS CONTRIBUTING TO THE PARAMAGNETISM OF NICKEL [and the Complete Continuity between Ferro- and Paramagnetism: "the Same Electrons in Each Case"].—Néel. (*Comptes Rendus*, 8th July, 1935, Vol. 201, No. 2, pp. 135–137.)

3237. THE STRUCTURE OF THE NICKEL-COBALT ALLOYS.—Broniewski and Pietrek. (*Comptes Rendus*, 16th July, 1935, Vol. 201, No. 3, pp. 206–208.)

3238. A MULTI-FREQUENCY GENERATOR [primarily for Magnetic Analysis: Frequencies 180, 300, 420 or 540 c/s].—Loughridge and others. (*Review Scient. Instr.*, June, 1935, Vol. 6, No. 6, pp. 163–166.)

3239. THE OSCILLATIONS OF ATMOSPHERIC MERCURY ARCS [Opening and Closing of Arc-Gap at Frequency of 50 or 100 c/s: Simple Method of Rectifying Small Alternating Currents].—Voss. (*Phil. Mag.*, July, 1935, Series 7, Vol. 20, No. 131, pp. 166–191.)

www.americanradiohistory.com

3240. A MERCURY CONTACT THERMOMETER WITH ADJUSTABLE "MAKE" TEMPERATURE [for Quartz Oscillator Control, etc: Adjustment by Current through Heater Winding round Mercury Capillary].—Jacobs. (*Lorenz Berichte*, April, 1935, No. 6, pp. 17–19.)

3241. THE "THYRATRON" MOTOR [Discussion].—Alexanderson. (*Elec. Engineering*, July, 1935, Vol. 54, No. 7, pp. 750–752.) *See* 1676 of May.

3242. A NEW SOURCE OF "KILOCYCLE KILOWATTS" [Correspondence].—Miles. (*Elec. Engineering*, July, 1935, Vol. 54, No. 7, p. 797.) *See* 2064 of June.

3243. RECENT DEVELOPMENTS IN TELEPHONE REPEATER STATION POWER PLANT.—Dye. (*P.O. Elec. Eng. Journ.*, July, 1935, Vol. 28, Part 2, pp. 125–130.)

3244. MOVING PICTURE FILM AS STANDARD MATERIAL FOR RECORDING INSTRUMENTS.—Ostroumov. (*Izvestia Elektroprom. Slab. Toka*, No. 4, 1935, pp. 40–43.)

The evolution of photographically recording meters, etc., is hindered by the limitations of the paper and optical system employed. The writer advocates a decreased width of track and a decreased length of optical lever, and the use of motion-picture film.

3245. THE "WEDGE-ON" CONDUCTOR LUG.—(*Electronics*, May, 1935, p. 167.)

STATIONS, DESIGN AND OPERATION

3246. A POLICE RADIO SYSTEM FOR NEWARK [Ultra-Short-Wave: Substantially Constant Received Signal in All Parts: 32 Police Cars and 4 Precinct Stations, with AVC Receivers and Loudspeakers].—Bailey. (*Bell Lab. Record*, June, 1935, Vol. 13, No. 10, pp. 290–294.)

The aerial is mounted on top of a 100 ft flagstaff itself 600 ft above the street. It consists of a $3\lambda/4$ vertical bronze tube ("about 7.5 m long") projecting above the earthed flagstaff, with a $\lambda/4$ conductor parallel to its lowest quarter. Effective radiation occurs from the upper half-wave portion of the aerial; the lowest quarter, together with the $\lambda/4$ parallel conductor, acts as an impedance-matching network coupling the aerial to the concentric transmission line from the transmitter, the inner conductor of this line being connected to the lower end of the $\lambda/4$ conductor.

3247. FIRE DEPARTMENT INSTALLS 5-METRE RADIO [Northwood, Middlesex].—(*Electronics*, June, 1935, p. 187.)

3248. ULTRA-SHORT-WAVE RADIO TELEPHONE CIRCUITS TO NORTHERN IRELAND [12 Wavelengths between 4 and 6 Metres].—Gracie. (*P.O. Elec. Eng. Journ.*, July, 1935, Vol. 28, Part 2, pp. 121–124.)

3249. PRACTICAL ASPECTS OF SINGLE SIDE BAND RADIO COMMUNICATION [the "Next Step" in Broadcasting].—Lamb. (*Proc. Inst. Rad. Eng.*, May, 1935, Vol. 23, No. 5, p. 407: summary only.) *See* also Eckersley, 2975, these Abstracts.

3250. THE PRESENT-DAY STATUS OF BROADCAST SYNCHRONISING [Review of Methods used] *and* SOME POSSIBILITIES OF SYNCHRONISING: WHAT A NEW BROADCAST REALLOCATION MIGHT SHOW [High-Fidelity 20-kc and other Special Channels: 1527 Stations provided for: etc.].—(*Electronics*, June, 1935, pp. 174–177: 177–178 and 183.)

3251. TEN YEARS OF BROADCASTING IN ITALY.—Lombardi. (*La Ricerca Scient.*, 15/30 June, 1935, 6th Year, Vol. 1, No. 11/12, pp. 561–569.)

3252. ON SOME VOICE-OPERATED STABILISATION ARRANGEMENTS [including an Equipment using both Grid Blocking and Relays].—Bigorgne and Marzin. (*Ann. des P.T.T.*, June, 1935, Vol. 24, No. 6, pp. 573–599.)

GENERAL PHYSICAL ARTICLES

3253. FORM AND SYMMETRY OF THE ELECTROMAGNETIC EQUATIONS: EQUIVALENCE OF ENERGY AND MASS [Fundamental Dimensions in Electricity reduced to Two, based on Properties of Electromagnetic Waves].—Urbanek. (*Comptes Rendus*, 17th June, 1935, Vol. 200, No. 25, pp. 2067–2070.)

3254. IONISATION POTENTIAL OF THE NITROGEN MOLECULE.—de Hemptinne and Savard. (*Comptes Rendus*, 24th June, 1935, Vol. 200, No. 26, pp. 2147–2148.)

3255. IONISATION BY COLLISION OF IONS [of Energies down to about 500 Volts: Results with Argon].—Rostagni. (*La Ricerca Scient.*, 15/30 June, 1935, 6th Year, Vol. 1, No. 11/12, pp. 584–585.)

3256. VELOCITIES OF POSITIVE IONS IN THE CORONA DISCHARGE [Increase in Mean Free Path of Ions with Increase in Ratio of Electric Field-Strength to Pressure].—Boulind. (*Phil. Mag.*, July, 1935, Series 7, Vol. 20, No. 131, pp. 68–75.)

3257. MEASUREMENT OF THE ROTATION OF THE PLANE OF POLARISATION IN OBLIQUE CRYSTALLINE REFRACTION [including Tests on Quartz].—Bruhat and Weil. (*Comptes Rendus*, 24th June, 1935, Vol. 200, No. 26, pp. 2192–2194.)

3258. OUTLINE OF A THEORY OF REACTIVITY [Oscillation of Mechanical Systems: Reactivity as Result of Opposed Distribution of Elasticity and Viscosity].—Vernotte. (*Comptes Rendus*, 17th June, 1935, Vol. 200, No. 25, pp. 2058–2061.)

3259. THE CHANGE OF RESISTANCE OF LIQUID METALS IN A MAGNETIC FIELD.—Fakidov and Kikoin. (*Physik. Zeitschr. der Sowietunion*, No. 4, Vol. 7, 1935, pp. 507–508: in English.) Further development of the work referred to in 1933 Abstracts, p. 579.

www.americanradiohistory.com

3260. THE ELEMENTARY THEORY OF GALVANO-MAGNETIC PHENOMENA IN CRYSTALS [and the Resistance Change in Transverse and Parallel Magnetic Fields].—Frenkel and Kontorawa. (*Physik. Zeitschr. der Sowietunion*, No. 4, Vol. 7, 1935, pp. 452–463: in English.)

3261. THEORY OF THE PHOTOELASTIC EFFECT OF CUBIC CRYSTALS [Optical Anisotropy of Atoms].—Mueller. (*Phys. Review*, 15th June, 1935, Series 2, Vol. 47, No. 12, pp. 947–957.)

3262. STUDIES IN PHOTOMAGNETISM [of Crystals and Solutions containing Ions of Iron Group].—Bose and Raha. (*Phil. Mag.*, July, 1935, Series 7, Vol. 20, No. 131, pp. 145–166.)

3263. THE LEVELS OF THE NEUTRON.—Sévin. (*Comptes Rendus*, 17th June, 1935, Vol. 200, No. 25, pp. 2070–2072.)

Based on the argument that if the velocity of an electron attained exactly that of light, it would have to preserve an invariable velocity in its trajectory, in whatever field of force the latter took place: and that this condition is rigorously fulfilled in the neutron.

3264. NEUTRONS, POSITRONS AND DEUTONS [Summary of Recent Work].—Neuert and Kirchner. (*Arch. f. Elektrot.*, 11th June, 1935, Vol. 29, No. 6, pp. 371–386.)

3265. ON THE PRODUCTION OF ELECTRONS AND POSITRONS BY A COLLISION OF MATERIAL PARTICLES. II [for a Velocity much less than that of Light].—Lifshitz. (*Physik. Zeitschr. der Sowietunion*, No. 4, Vol. 7, 1935, pp. 385–398: in English). For Part I *see* 899 of March.

MISCELLANEOUS

3266. ON THE QUESTION OF THE APPLICATION OF DECIMETRE [Micro-] WAVES IN AVIATION.—Hahnemann. (*See* 3078.)

3267. ON THE TCHEBICHEFF POLYNOMIALS.—Favard: Tchebicheff. (*Comptes Rendus*, 17th June, 1935, Vol. 200, No. 25, pp. 2052–2053.) For van der Pol and Weijers' paper on these polynomials *see* 1934 Abstracts, p. 339.

3268. ON THE EXPANSION OF GREEN'S FUNCTION.—Hansen. (*Proc. Nat. Acad. Sci.*, June, 1935, Vol. 21, No. 6, pp. 326–330.)

3269. SPHEROIDAL FUNCTIONS OF THE SECOND KIND.—Stratton. (*Proc. Nat. Acad. Sci.*, June, 1935, Vol. 21, No. 6, pp. 316–321.) For previous papers *see* 706 of March and 957 of April.

3270. ELLIPTIC INTEGRALS OF LARGE MODULI.—Dwight. (*See* 3180.)

3271. RIGOUR AND NOMENCALTURE IN MATHEMATICS.—Meyers: McLachlan. (*Wireless Engineer*, June, 1935, Vol. 12, No. 141, pp. 324–325.) Prompted by McLachlan's letter (2477 of July).

3272. ELECTRICAL METHODS AND MACHINES FOR THE SOLUTION OF SYSTEMS OF LINEAR EQUATIONS [Description and Circuits of Known Machines by Bush, Mallock, and Cauer: Automatic Wheatstone Bridge].—Cauer. (*E.N.T.*, May, 1935, Vol. 12, No. 5, pp. 147–157.)

3273. "RADIOÉLECTRICITÉ GÉNÉRALE" [Vol. I.—Study of Circuits and Propagation: Book Review].—Mesny. (*Wireless Engineer*, July, 1935, Vol. 12, No. 142, p. 362.)

3274. "DIE PATENTE DER FUNKEMPFANGSTECHNIK" [Book Review].—Borchardt. (*Proc. Inst. Rad. Eng.*, May, 1935, Vol. 23, No. 5, p. 541.)

3275. "GRUNDZÜGE DER SPRACHNORMUNG IN DER TECHNIK" [The Fundamentals of Language Standardisation in Technics: Book Review].—Wüster. (*E.T.Z.*, 4th April, 1935, Vol. 56, No. 14, p. 415.)

3276. "HANDBUCH DER FUNKTECHNIK UND IHRER GRENZGEBIETE."—(*Radio, B., F. für Alle*, May, 1935, Vol. 14, No. 5.)—*See* 1311 of April. This instalment deals chiefly with insulating and magnetic materials; it ends with an index of German radio components, etc., and their makers, and the beginning of an exhaustive subject index of the Handbook itself.

3277. "NATIONAL PHYSICAL LABORATORY: REPORT FOR THE YEAR 1934" [Book Review].—(*Journ. Scient. Instr.*, July, 1935, Vol. 12, No. 7, pp. 240–241.)

3278. PROGRESS OF ELECTRICAL COMMUNICATION IN THE FIELD OF WORK OF THE GERMAN POST OFFICE IN 1934.—(*T.F.T.*, March, 1935, Vol. 24, No. 3, pp. 58–66.)

3279. RADIO NOVELTIES AT THE 1935 LEIPZIG FAIR.—GROSS. (*Radio, B., F. für Alle*, May, 1935, Vol. 14, No. 5, pp. 79–83.)

3280. RADIO ADVANCES IN GERMANY.—Zawadzki. (*See* 3020.)

3281.—I.R.E. TENTH ANNUAL CONVENTION, DETROIT: PROGRAMME: PROGRESS OF THE RADIO ART.—(*Electronics*, June and July, 1935, pp. 201–204 and 206–211.)

3282. RADIO DEVELOPMENTS DURING 1934 [Fixed, Mobile and Broadcasting Services, and Allied Fields].—(*Proc. Inst. Rad. Eng.*, May, 1935, Vol. 23, No. 5, pp. 415–447.) By various well-known writers.

3283. A NEW TELEMETERING SYSTEM [using Photocell and Induction Meter Combination].—V. O. Arutiunov. (*Izvestia Elektroprom. Slab. Toka*, No. 4, 1935, pp. 30–39.) Performance includes the indication of the polarity, for example, in readings of central-zero instruments: further, the algebraic addition of measurements at any number of points can be easily obtained.

www.americanradiohistory.com

3284. HIGH-FREQUENCY COMMUNICATION OVER POWER LINES.—Diakov and Evdokimov. (*Izvestia Elektroprom. Slab. Toka*, No. 4, 1935, pp. 21–30.)

3285. ROTATING PLATE METHOD FOR MEASURING SMALL DEFLECTIONS OF OPTICAL INDICATORS (ADDITIONS) [Optical Magnification: Displacement of Zero: Light Source].—Czerny, Heins and Woltersdorff. (*Zeitschr. f. Physik*, No. 3/4, Vol. 95, 1935, pp. 262–264.)

3286. ON THE PHYSIOLOGICAL EFFECTS OF ULTRA-SHORT WAVES [Separation of Thermal Action from Specific Biological Physico-Chemical Effect on Nerve Ending: Experiments on Frog's Heart].—Sasada and Amano. (*Journ. I.E.E. Japan*, March, 1935, Vol. 55 [No. 3], No. 560, pp. 186–189: English summary pp. 30–31.)

3287. ACTION OF SHORT WAVES ON ANTI-VENOM SERUMS AND THEIR NEUTRAL MIXTURES WITH THE CORRESPONDING POISONS.—Phisalix and Pasteur. (*Comptes Rendus*, 8th July, 1935, Vol. 201, No. 2, pp. 163–166.)

3288. SURVEY OF THE PRESENT POSITION OF HIGH-FREQUENCY TECHNIQUE.—F. Tank. (*Bull. Assoc. suisse des Élec.*, No. 13, Vol. 26, pp. 337–342: in German.)

3289. "ELECTRIFICATION OF AGRICULTURE": No. 5, 1934. (Russian Magazine, 6 numbers per year: obtainable through International Book Co., 18, Kusnetsky Most, Moscow.)

This issue contains a number of articles dealing with the applications of electricity in biology, including "Electricity as a factor in organic processes" by Evreinov (a general survey of electrical phenomena taking place in a living organism; containing data for choosing the most suitable frequencies for treating various organs by h.f. currents); "On the ionisation of the cotton plant" by Cherniavsky (experiments to determine the amount of ionisation for which the best effect on the cotton plant is obtained); and "An investigation of the lethal effect of ultra-short waves on weevils, and of the effect of such waves on the quality of wheat" by Vishniakova (an account of experiments which have shown the practical utility of ultra-short waves in the struggle against grain pests): all in Russian.

3290. "BRAIN WAVES" OBSERVED BETTER DURING SLEEP OF SUBJECT.—Loomis and others. (*Sci. News Letter*, 22nd June, 1935, Vol. 27, No. 741, p. 397.) For other work on these waves *see* 2524 of July.

3291. RESEARCH ON "BRAIN WAVES" [Survey].—Stafford. (*Sci. News Letter*, 6th July, 1935, Vol. 28, No. 743, pp. 10–12.) *See* also 3290, above.

3292. RECENT DEVELOPMENTS IN ELECTRICAL INSTRUMENTS FOR BIOLOGICAL AND MEDICAL PURPOSES.—Matthews. (*Journ. Scient. Instr.*, July, 1935, Vol. 12, No. 7, pp. 209–214.)

3293. EMISSION OF RADIATION BY THE EGGS OF *Discoglossus* IN COURSE OF DEVELOPMENT [Ultra-Violet Radiation detected by Photo-electric Counters].—Lévy and Audubert. (*Comptes Rendus*, 16th July, 1935, Vol. 201, No. 3, pp. 236–238.) Using the highly sensitive counters employed in the nerve-excitation work referred to in 2915 of August.

3294. ACTION OF METALS AT A DISTANCE ON GERMINATING SEEDS [due to Secondary Rays, chiefly Beta-Electrons].—Nadson and Stern. (*Comptes Rendus*, 8th July, 1935, Vol. 201, No. 2, pp. 159–161.) These rays are emitted by the metals under the influence of the radioactivity of the air.

3295. SPACE DETECTOR LOCATES CONCEALED WEAPONS [and Other Metallic Objects].—P. W. Koch Company. (*Electronics*, May, 1935, p. 157.) *See* also 2141 of June: no details.

3296. MILLIONTHS OF AN INCH MEASURED WITH AN ELECTRONIC RELAY [Micrometer with more than 30 Megohms in Contact Circuit].—Carson. (*Electronics*, May, 1935, p. 160.)

3297. CATHODE-RAY TUBE APPLICATIONS [Power Measurement, Watch Timing, Compression and Fuel Detonation Characteristics, Size Tolerance Indication, etc.].—Stinchfield. (*Electronics*, May, 1935, pp. 153–155.)

3298. INDUSTRIAL ELECTRONIC CONTROL APPLICATIONS [Discussion].—Gulliksen and Stoddard. (*Elec. Engineering*, July, 1935, Vol. 54, No. 7, pp. 752–754.) *See* 1296 of April.

3299. SENSITIVITY AND OUTPUT OF VARIOUS TYPES OF PHOTOCELLS.—Ruedy. (*Canadian Journ. of Res.*, June, 1935, Vol. 12, No. 6, pp. 840–847.)

3300. ON CIRCUITS FOR [Alkali] PHOTOCELLS WORKING IN CONJUNCTION WITH GRID-CONTROLLED DISCHARGE TUBES [Thyratrons, etc.].—Kluge and Briebrecher. (*E.T.Z.*, 27th June, 1935, Vol. 56, No. 26, pp. 731–735.)

3301. A [Photocell] METHOD OF MEASURING THE VELOCITY OF FALL OF SOLID SPHERES IN A VISCOUS LIQUID [in connection with River and Canal Investigations].—Ghali. (*Comptes Rendus*, 24th June, 1935, Vol. 200, No. 26, pp. 2155–2157.)

3302. NOTE ON THE VARIATIONS IN AREA AND IN STAINING INTENSITY OF RED BLOOD CELLS, AND ON THEIR CORRELATION [using Photo-electric Technique].—Savage, Goulden and Isa. (*Canadian Journ. of Res.*, June, 1935, Vol. 12, No. 6, pp. 803–811.) For a previous paper *see* 1933 Abstracts, p. 231.

3303. AN A.C. PHOTOELECTRIC CONTROL [using RCA 885 Gas Triode and reducing Necessary Sensitivity of Relay].—Bennett. (*Review Scient. Instr.*, July, 1935, Vol. 6, No. 7, pp. 204–205.)

www.americanradiohistory.com

Some Recent Patents

The following abstracts are prepared, with the permission of the Controller of H.M. Stationery Office, from Specifications obtainable at the Patent Office, 25, Southampton Buildings, London, W.C.2, price 1/- each.

THERMIONIC VALVES

Application date, 4th August, 1933. No. 420546

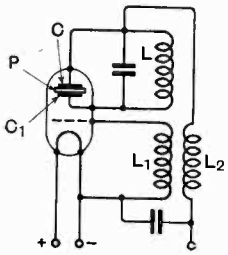

No. 420546.

A piezo-electric crystal *P*, fitted with metallic coating, *C*, *C*1 on both faces, is used as the anode of a thermionic valve. An oscillatory circuit *L* is connected across the crystal, as shown, and reaction is provided by means of the coils *L*1, *L*2. The circuit *L* is excited from a separate source(not shown). The operation of the valve is described as follows: "The crystal *P* being in a state of mechanical vibration (under the influence of the oscillations in the circuit *L*) the electron stream through the valve impacts upon an oscillating surface instead of a rigid one." Amongst other things the arrangement is stated to be used for amplitude and frequency modulation, particularly with ultra-short waves.

Patent issued to F. Schuetz.

"VISUAL" D.F. SYSTEMS

Application date, 6th May, 1933. No. 420669

A wireless beacon station is arranged to radiate a rotating beam, and simultaneously to transmit in all directions a "picture" of the compass scale showing the direction of the beam, together with code letters identifying the beacon station. A television receiver on a ship or other mobile craft then throws on to the screen a visual representation of the compass marking, including a transverse "gap" which is gradually filled up. The instantaneous direction of the transmitter is indicated when the gap is completely filled and appears dead black. The system is designed to facilitate the use of direction-finding equipment without requiring a knowledge of the Morse Code.

Patent issued to Marconi's Wireless Telegraph Co., Ltd.; H. M. Dowsett; and L. E. Q. Walker.

SUPERHETERODYNE RECEIVERS

Convention date (Germany), 4th June, 1932. No. 420685

The signal and local frequencies are "mixed" in a valve containing three grids. The one nearest the cathode is negatively biased so that it serves to regulate the density of the electron stream, and at the same time is fed with local oscillations. The next grid is positively biased and is used to control the velocity of the electrons. The third grid takes the signal input. Alternatively the signal input may be applied to the first grid, the third grid being back-coupled to the anode to produce the local oscillations.

Patent issued to Telefunken Ges. für drahtlose Telegraphie m.b.h.

MOTOR-CAR SETS

Application date, 9th August, 1933. No. 420702

Owing to the restricted height and length of the aerial available on a motor-car, it is usually tight-coupled to the first valve in order to offset the low signal pick-up. On the other hand, tight-coupling transfers much of the large aerial capacity, and so tends to restrict the normal tuning-range of the variable condenser. According to the invention the difficulty is overcome by coupling the aerial to the first amplifier through a coil fitted with a movable powder-core for permeability tuning.

Patent issued to E. K. Cole, Ltd., and E. J. Wyborn.

CATHODE-RAY TUBES

Convention dates (Germany), 6th June, 1932, and 8th April, 1933. No. 420752

The presence of gas in a cathode-ray tube is likely to create a positive space-charge between the deflecting plates used to apply a scanning motion to the electron stream. This in turn produces a visible "cross" at about the centre of the field of vision on the fluorescent screen, due to the distortion or bending of the scanning lines as they pass through the zero point of the deflecting potentials. The formation of the "cross" is evidence of the distortion caused by the presence of the positive space-charge referred to.

In order to avoid this effect, an additional pair of plates are arranged at an angle to the main set of deflecting-electrodes, and are given such a bias that the points at which the deflecting voltages pass through zero are thrown outside the "picture" area on the fluorescent screen. Additional control electrodes are also inserted along the line of the electron stream between the anode and the main deflecting plates.

Patent issued to E Hudec.

MODULATING SYSTEMS

Convention date (Germany), 1st November, 1932. No. 421013

In high-frequency modulating systems, the usual causes of distortion are eliminated by rectifying a part of the output current, preferably by means of a diode valve coupled to the last amplifier, and feeding the rectified component back, either directly or after amplification, to the modulator input, where it acts as an automatic compensating voltage. Curves are given showing how to calculate the value of the required feed-back voltage.

Patent issued to Telefunken ges. für drahtlose Telegraphie m.b.h.

www.americanradiohistory.com

CATHODE-RAY TUBES

Convention dates (Germany), 14th May and 15th July, 1932. No. 421050

The ray is concentrated and focused by an electron-optical system designed to produce a curved or non-uniform electrostatic field of force

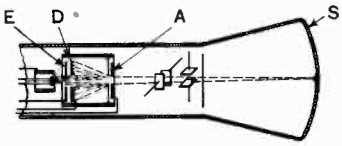

No. 421050.

for this purpose. An apertured mica disc *D*, carrying a semi-conductive coating on one side, is interposed in the path of the stream between the anode *A* and an auxiliary electrode *E*. The inner circumference of the disc *D* is connected to the electrode *E*, and its outer circumference to a more-negative, variable potential, so as to produce an inclined field of force along the axis of the stream, as shown in dotted lines. This acts as a "lens" to concentrate and focus the stream into a sharply defined image of the anode-aperture on the fluorescent screen.

Patent issued to Radioakt. D. S. Loewe.

Convention dates (Germany), 14th May and 27th June, 1932, and 12th January, 1933. No. 421051

The cathode is so arranged that the initial direction of emission is at right-angles to the main axis of the tube. As shown in the Figure, the cathode *C* is set to face the near wall of the tube,

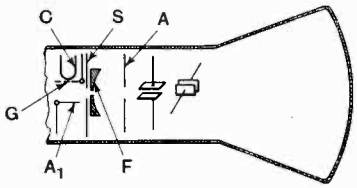

No. 421051.

and its emission is controlled by a grid *G* and auxiliary anode *A*1. A screen *S* shuts the stream off from the main axis of the tube, except for a central aperture through which it is diverted, so as to pass through a focusing electrode *F* on towards the anode *A*. Other equivalent electrode systems are described.

One advantage of the arrangement is that the ionic stream in the tube can be separated from, and caused to travel in the opposite direction to the electron stream. This serves to protect the cathode from damage by ionic bombardment, and so renders it possible to produce an electron stream of high intensity.

Patent issued to Radioakt. D. S. Loewe.

TELEVISION RECEIVERS

Application date, 13th June, 1933. No. 421065

In cathode-ray reception it is found that the orientation of the image on the fluorescent screen is not sufficiently uniform to enable the tube to be permanently fixed in a cabinet casing. According to the invention, the tube is mounted on a central bolt *B* so that it can be rotated about its longitudinal axis. Adjustment is effected by means of a knob *K* connected through a universal shaft *S* with a pinion *P* engaging a cog-wheel *W* on the base of the tube. The tube may be rotated through a complete right-angle so as to change from vertical to horizontal scanning. Flexible leads *L* are pro-

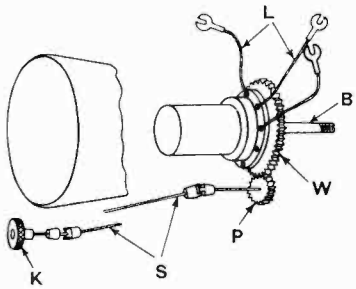

No. 421065.

vided for supplying the necessary operating-potentials to the various electrodes.

Patent issued to T. E. Bray and Baird Television, Ltd.

PUSH-PULL AMPLIFIERS

Convention date (Holland), 16th June, 1932. No. 421189

In push-pull amplifiers of the type in which the valves are biased to the lower part of the characteristic, distortion is eliminated by taking measures to prevent the working point of each valve from passing into a region of the anode-current charac-

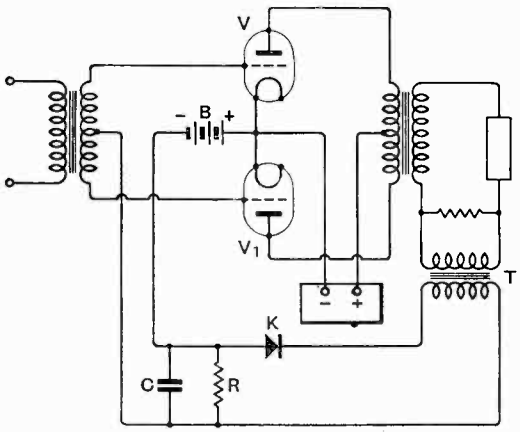

No. 421189.

www.americanradiohistory.com

teristic in which the input voltage is ineffective. In one arrangement the required compensation is applied to the anodes by taking the H.T. supply through saturable choke-coils which offset the normal voltage drop.

Or as shown in the Figure a compensating voltage is applied direct to the grids. A part of the output current from the valves *V*, *V*1 is fed back through a transformer *T* to a rectifier *K*. The resulting D.C. voltage across the resistance *R* and smoothing condenser *C* is then applied to the grids of the two valves in opposition to the voltage from the bias battery *B*.

Patent issued to J. J. Numans.

CATHODE-RAY TUBES

Convention date (U.S.A.), 30th July, 1932. No. 421201

Relates to cathode-ray tubes of the kind having a sensitive "mosaic" electrode on which the picture to be televised is focused in order to produce an initial electrostatic image. A known form of mosaic surface consists of a thin sheet of mica upon which minute silver globules are deposited and afterwards oxydised so as to form an insulated coating. It is important that this oxydised coating should be of the proper thickness to obtain the maximum photo-sensitive response, before it is finally covered with a deposit of caesium.

In order to control the process of oxidation, the mosaic electrode, mounted inside an oxygen-filled bulb, is subjected to the high-frequency field from an external electrode. The latter is manipulated by hand and is moved towards or away from the glass bulb, as required, to regulate the ionisation of the contained oxygen and the resulting oxidation of the silver globules on the mosaic electrode.

Patent issued to Marconi's Wireless Telegraph Co., Ltd.

RELAYING SYSTEMS

Application date, 13th June, 1933. No. 421283

When broadcast signals are relayed by wire from a central station to a circle of outlying subscribers, say at a level of from 35 to 40 volts, it is found that the ohmic losses in the distributing-line are so high that repeater stations become necessary. In order to avoid this, it is proposed to raise the transmission voltage to an optimum value between 150 and 200 volts. The signals are generated at low voltage, and are stepped up to the figure stated for the transmission line, and then stepped down again at the point where they are fed to the subscriber's set.

Patent issued to Standard Radio Relay Services, Ltd., and P. Adorjan.

FREQUENCY-CHANGING VALVES

Application date, 16th June, 1933. No. 421287

Two indirectly-heated cathodes are spaced apart along a common heating filament, a grid winding being associated with both cathodes, and a single anode surrounding the grid structure. One part of the grid may be wound non-uniformly so as to give a variable-mu characteristic, whilst the other part of the grid is of uniform pitch. Screening and suppressor grids may also be added.

The valve is used as a combined oscillator and frequency-changer in a superhet receiver. The input circuit is connected across the variable-mu grid and one of the cathodes, whilst the tuned anode circuit is back-coupled to a coil connecting the other part of the control grid to the second cathode.

Patent issued to Murphy Radio, Ltd. and G. B. Baker.

HIGH-FREQUENCY INDUCTANCES

Convention date (Germany), 28th November, 1932. No. 421353

A multi-layer winding *L* of low capacity is enclosed, as shown, between moulded core-members *M*, *M*1 of non-laminated magnetic material. The core-members are split vertically down one side at *A* and are divided laterally. A strip of elastic

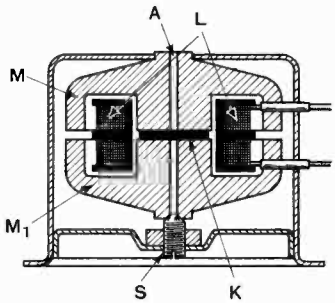

No. 421353.

non-magnetic material *K* is inserted between the two halves, so as to allow a slight adjustment of the spacing, through the screw *S*. The arrangement ensures a very short iron path, whilst the high capacity usually associated with compact coils is offset by sectionalising the windings.

Patent issued to H. Vogt.

FLUORESCENT SCREENS

Convention date (Germany), 22nd February, 1933. No. 421507

It is desirable that the screen of a cathode-ray tube should be able to conduct away the electrons striking it, though in the case of a television receiver, the screen must be transparent and cannot therefore be backed by a solid conductor. In order to overcome this difficulty, a very thin metal layer (approaching the monatomic condition) is deposited by cathodic sputtering on the back of the screen, prior to the application of the fluorescent material. The metal layer so formed has sufficient conducting properties for the main purpose in view, though the light absorbed by it does not amount to more than ten per cent. of the total.

Patent issued to A. C. Cossor, Ltd.

www.americanradiohistory.com